SHELF BRACKETS

Dim Scale

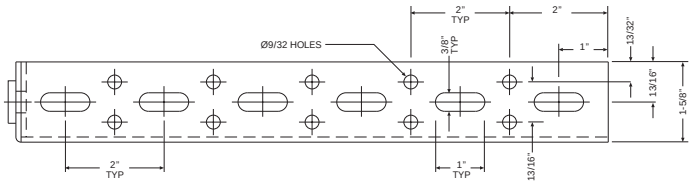

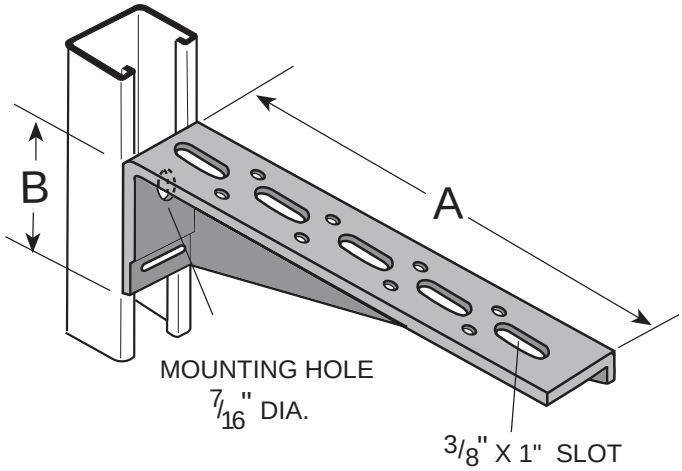

# of Slots = A/2
# of Rows of Holes = (A/2) – 1

FS-5600 Series
SHELF BRACKETS

FS-5600-R	FS-5600-L	A	B	#/Cpc
FS-5600-6R	FS-5600-6L	6"	1-15/16"	57#
FS-5600-8R	FS-5600-8L	8"	2-7/16"	82#
FS-5600-10R	FS-5600-10L	10"	2-15/16"	105#
FS-5600-12R	FS-5600-12L	12"	3-7/16"	138#
FS-5600-14R	FS-5600-14L	14"	3-15/16"	175#
FS-5600-16R	FS-5600-16L	16"	4-7/16"	180#
FS-5600-18R	FS-5600-18L	18"	4-15/16"	225#
FS-5600-20R	FS-5600-20L	20"	5-7/16"	260#
FS-5600-22R	FS-5600-22L	22"	5-15/16"	325#
FS-5600-24R	FS-5600-24L	24"	6-7/16"	385#
FS-5600-26R	FS-5600-26L	26"	6-15/16"	435#
FS-5600-28R	FS-5600-28L	28"	7-7/16"	488#
FS-5600-30R	FS-5600-30L	30"	7-15/16"	530#

FS-5600-R RIGHT HAND (SHOWN)

UNIFORM DESIGN LOAD = 300#
WITH 12 GA. CHANNEL
SAFETY FACTOR = 2-1/2

CHANNEL BRACKETS

Allowable Moment = 5,000 IN LB. for fitting only.
Channel may determine load capacity.

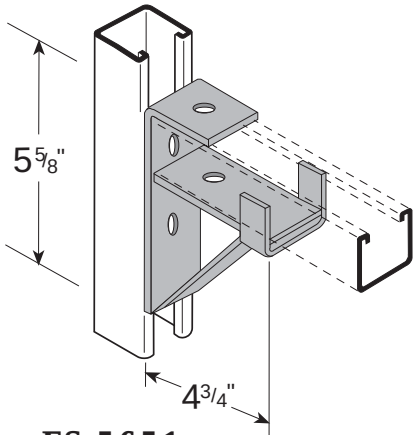

FS-5651 230#/Cpc
SHELF BRACKET FOR FS-200

Allowable Moment = 12,000 IN LB. for fitting only.
Channel may determine load capacity.

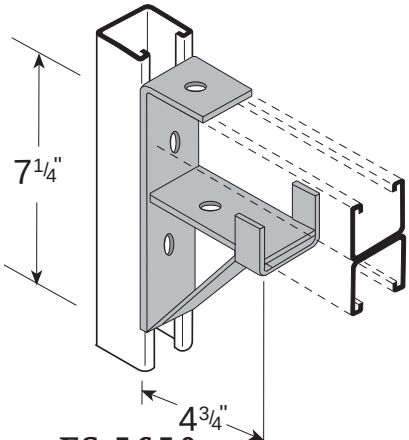

FS-5650 275#/Cpc
SHELF BRACKET FOR FS-201

FS-5600 Thickness = 12 Ga. / FS-5650 / 51 Thickness = 1/4"