ICC-ES Evaluation Report

ESR-2552

Reissued March 2024

Revised August 2024

Subject to renewal March 2025

This report also contains:

- LABC Supplement

- FBC Supplement

ICC-ES Evaluation Reports are not to be construed as representing aesthetics or any other attributes not specifically addressed, nor are they to be construed as an endorsement of the subject of the report or a recommendation for its use. There is no warranty by ICC Evaluation Service, LLC, express or implied, as to any finding or other matter in this report, or as to any product covered by the report.

Copyright © 2024 ICC Evaluation Service, LLC. All rights reserved.

DIVISION: 06 00 00—WOOD, PLASTICS AND COMPOSITES Section: 06 05 23—Wood, Plastic, and Composite Fastenings	REPORT HOLDER: SIMPSON STRONG-TIE COMPANY INC.	EVALUATION SUBJECT: SIMPSON STRONG-TIE® FACE-MOUNT HANGERS FOR SAWN LUMBER, STRUCTURAL COMPOSITE LUMBER (SCL), PREFABRICATED WOOD I-JOISTS AND GLULAM BEAMS (ENGINEERED WOOD PRODUCTS)	

1.0 EVALUATION SCOPE

Compliance with the following codes:

- 2024, 2021, 2018, 2015, and 2012 *International Building Code®* (IBC)
- 2024, 2021, 2018, 2015, and 2012 *International Residential Code®* (IRC)

For evaluation for compliance with codes adopted by the *Los Angeles Department of Building and Safety* (LADBS), see ESR-2552 LABC and LARC Supplement.

Property evaluated:

- Structural

2.0 USES

The Simpson Strong-Tie® face-mount hangers described in this report are used as wood framing connectors in wood construction in accordance with Section 2304.10.4 of the 2024 and 2021 IBC, 2304.10.3 of the 2018 and 2015 IBC and Section 2304.9.3 of the 2012 IBC. The face-mount hangers may also be used in structures regulated under the IRC when an engineered design is submitted in accordance with Section R301.1.3 of the IRC.

3.0 DESCRIPTION

3.1 General:

With the exception of the CBH, ACBH, SCBH and HSKP Hangers Series, the Simpson Strong-Tie face-mount hangers described in this report are U-shaped hangers that have prepunched holes for the installation of nails or Simpson Strong-Drive SDS screws, depending on the hanger model, into the face of the supporting wood header or beam or ledger. The CBH Hanger is used in pairs and is a die-formed steel plate with a welded stud and prepunched holes for the installation of Simpson Strong-Drive SDS screws. The ACBH hanger is used in pairs and is manufactured in one piece from aluminum with predrilled holes for the installation of Simpson Strong-Drive SDCF screws. The SCBH hanger is used in pairs and is manufactured in one piece from steel with predrilled holes for the installation of Simpson Strong-Drive SDCF screws. The HSKP hanger has a

horizontal bearing plate to support the joist/beam and includes prepunched holes in its back plate for the installation of Simpson Strong-Drive SDCF screws into the face of the supporting wood Column.

3.1.1 LU Series Hangers: The LU series hangers are formed from No. 20 gage galvanized steel. See Table 1 for hanger dimensions, required fasteners, and allowable loads; and Figure 1 for a drawing of a typical LU series hanger.

3.1.2 LUCZ Series Hangers: The LUCZ hangers have concealed flanges to allow for installation near the end of a supporting member such as a ledger or header. The hangers are formed from No. 18 gage galvanized steel coated with a G185 zinc coating. See Table 2 and Figure 2 for hanger dimensions, required fastener schedule, allowable loads and a typical installation detail.

3.1.3 U Hangers: The U series hangers are formed from No. 16 gage galvanized steel. The hangers are face-nailed to the supporting wood header, and nailed to the supported solid sawn lumber, structural composite lumber or prefabricated wood I-joists with web stiffeners to accept the required size and number of joist nails shown in Table 3. See Table 3 for the U series hanger model numbers, hanger dimensions, required fasteners, and allowable loads. See Figure 3 for a drawing of a typical U series joist hanger.

3.1.4 HU and HUC Series Hangers: The HU and HUC series hangers are formed from No. 14 gage galvanized steel, and are face-nailed to the supporting wood header/beam and nailed to the solid sawn lumber, supported structural composite lumber or prefabricated wood I-joists with web stiffeners. HU hangers having a seat width (W) equal to or greater than $2^{9}/_{16}$ inches (65 mm) are available with concealed flanges and are specified with the model designation HUC. See Table 4 for hanger model numbers, hanger dimensions, required fasteners and allowable loads based on the nailing. The HU and HUC hangers have triangular and round holes in both the U-shaped portion supporting the wood joist and in the flanges attached to the supporting wood header/beam. The allowable loads are achieved by filling all holes (both the round and triangular) with size of nails shown in Table 4. See Figures 4A and 4B for drawings of typical HU and HUC hangers, and Figure 4C shows a typical installation of an HU hanger supporting a prefabricated wood I-joist with approved web stiffeners.

3.1.5 HUCQ Series Hangers: The HUCQ series hangers are formed from No. 14 gage galvanized steel and are used to support glulam beams or other approved wood members. Other approved wood members must be laterally supported at the ends in accordance with Section 2308.8.6 of the 2024 IBC (Section 2308.4.6 of the 2021, 2018, 2015 and 2012 IBC) and Section R502.7 of the IRC. The hangers have prepunched holes for the installation of Simpson Strong-Drive SDS series wood screws (SDS). See Table 5 for the HUCQ series model numbers, hanger dimensions, required fasteners and allowable loads. See Figure 5 for a drawing of the HUCQ series hanger.

3.1.6 LUS Series Hangers: The LUS series hangers are formed from No. 18 gage galvanized steel. The hangers have prepunched holes for the installation of nails that are driven at a 45-degree angle through the joist and into the header, which is described as double shear nailing in the installation instructions. See Table 6 for the hanger dimensions, required fasteners, and allowable loads; and Figure 6 for a drawing of a typical LUS series hanger.

3.1.7 MUS Joist Hanger: The MUS series hangers are formed from No. 18 gage galvanized steel. The U-shaped portion of the hangers has prepunched holes for the installation of joist nails that are driven at an angle through the joist and into the header, which is described as double shear nailing in the installation instructions. See Table 7 for the hanger dimensions, required fasteners, and allowable loads; Figure 7 for a drawing of a typical MUS series hanger.

3.1.8 HUS Series Hangers: The HUS hangers having a seat width, *W*, of $3^{9}/_{16}$ inches (90 mm) are formed from No. 14 gage galvanized steel. The HUS1.81/10 hanger with a seat width, *W*, of $1^{13}/_{16}$ inches (46 mm) is formed from No. 16 gage galvanized steel. The hangers have prepunched holes for the installation of nails that are driven at a 45-degree angle through the joist and into the header, which is described as double shear nailing in the installation instructions. See Table 8 for HUS series hanger models, hanger dimensions, required fasteners, and allowable loads. See Figure 8 for a drawing of a typical HUS hanger.

3.1.9 HHUS Series Hangers: The HHUS series hangers are formed from No. 14 gage galvanized steel. The hangers have pre-punched holes for the installation of nails that are driven at a 45 degree angle through the joist and into the header, which is described as double shear nailing in the installation instructions. See Table 9 for the hanger model numbers, hanger dimensions, required fasteners, and allowable loads. See Figure 9 for a drawing of a typical HHUS hanger.

3.1.10 HGUS Series Hangers: The HGUS series hangers are formed from No. 12 gage galvanized steel and are used to support glulam beams or other approved wood members. Other approved wood members must be laterally supported at the ends in accordance with Section 2308.8.6 of the 2024 IBC (Section 2308.4.6 of the 2021, 2018, 2015 and 2012 IBC) and Section R502.7 of the IRC. The hangers have prepunched holes for

the installation of nails that are driven at a 45-degree angle through the joist and into the header, which is described as double shear nailing in the installation instructions. See Table 10 for the HGUS series hanger model numbers, hanger dimensions, required fasteners and allowable loads. See Figure 10 for a drawing of a typical HGUS hanger.

3.1.11 HTU Series Hangers: The HTU hangers are designed to support trusses installed with full or partial heel heights and gaps between the truss and the supporting girders of up to, but not exceeding, $^1/_2$ inch (12.7 mm), as shown in Tables 11A and 11C, and $^1/_8$ inch (3.2 mm) as shown in Table 11B. Minimum and maximum nailing options are given in Tables 11A, 11B, and 11C to address varying heel heights and support conditions. The HTU hangers are formed from No. 16 gage galvanized steel. See Table 11A and Figures 11A and 11B for hanger dimensions, required fastener schedule, allowable loads and an installation detail for installations in which the gap between the truss and the supporting girders is less than or equal to $^1/_2$ inch (12.7 mm). See Table 11B and Figures 11A and 11B for hanger dimensions, required fastener schedule, allowable loads and an installation detail for installations in which the gap between the truss and the supporting girders is less than or equal to $^1/_8$ inch (3.2 mm). See Table 11C and Figures 11A and 11C for hanger dimensions, required fastener schedule, allowable loads and an installation detail for installations in which the minimum allowable number of nails is driven into the supporting girder, and the gap between the truss and supporting girder is less than or equal to $^1/_2$ inch (12.7 mm).

3.1.12 LGU, MGU, HGU and HHGU Series Hangers: The LGU and MGU series hangers are formed from No. 10 gage galvanized steel; HGU series hangers are formed from No. 7 gage galvanized steel; and HHGU series hangers are formed from No. 3 gage steel. The LGU, MGU, HGU and HHGU series hangers are used to support glulam beams or other approved wood members. Other approved wood members must be laterally supported at the ends in accordance with Section 2308.8.6 of the 2024 IBC (Section 2308.4.6 of the 2021, 2018, 2015 and 2012 IBC) and Section R502.7 of the IRC. The hangers have pre-punched holes for the installation of Simpson Strong-Drive SDS series wood screws (SDS). See Table 12 for the LGU, MGU, HGU and HHGU series model numbers, hanger dimensions, required fasteners and allowable loads. See Figure 12 for a drawing of the HHGU series hanger and a typical installation detail.

3.1.13 SUR/L Series Hangers: The SUR/L series hangers are formed from No. 16 gage galvanized steel. The SUR and SUL hangers are identical except they are skewed at 45 degrees to the right (SUR) and the left (SUL), respectively. See Table 13 for hanger models, hanger dimensions, required fasteners, and allowable loads. See Figure 13A for a drawing of a typical SUL hanger and Figure 13B for a typical SUR hanger installation.

3.1.14 HSUR/L Series Hangers: The HSUR/L series hangers are formed from No. 14 gage galvanized steel. The HSUR and HSUL hangers are identical except they are skewed at 45 degrees to the right (HSUR) and the left (HSUL), respectively, and are designed to support prefabricated wood I-joists having approved web stiffeners, and structural composite lumber (SCL). See Table 14 for the hanger model numbers, hanger dimensions, required fasteners, and allowable loads. See Figure 14A for a drawing of a typical HSUR hanger, and Figure 14B for a typical HSUR hanger installation.

3.1.15 IUS Series Hangers: The IUS series hangers are formed from No. 18 gage galvanized steel and are used exclusively to support prefabricated wood I-joists to a supporting wood member. See Table 15A for the IUS series hanger model numbers, hanger dimensions, and required fasteners; and Table 15B for allowable loads. See Figures 15A, 15B, and 15C for drawings of a typical IUS hanger and a typical IUS hanger installation.

3.1.16 MIU Series Joist Hangers: The MIU series hangers are formed from No. 16 gage galvanized steel and are used to support prefabricated wood I-joists or other approved wood members. Other approved wood members must be laterally supported at the ends in accordance with Section 2308.8.6 of the 2024 IBC (Section 2308.4.6 of the 2021, 2018, 2015 and 2012 IBC) and Section R502.7 of the IRC. See Table 16 for the MIU series hanger model numbers, hanger dimensions, required fasteners, and allowable loads. See Figure 16A for a drawing of a typical MIU hanger and Figure 16B for a drawing of a typical MIU hanger installation.

3.1.17 DU, DHU and DHUTF Series Hangers: The DU, DHU and DHUTF series hangers are face-mount and top-flange hangers that are formed from either No. 14 gage or No. 12 gage galvanized steel. They are designed to transfer joist floor loads to a wood stud wall through two layers of $^5/_8$-inch-thick (15.9 mm) gypsum board complying with ASTM C1396, and are installed using a combination of nails and Simpson Strong-Drive SDS series wood screws (SDS), which are addressed in ESR-2236. These hangers are installed after the two layers of $^5/_8$" Type X gypsum board is installed and fastened using, at a minimum, the fastener schedule in Item 14-1.5 in IBC Table 721.1(2). See Table 17A for hanger dimensions and allowable loads. See Table 17B for fastener schedule. See Figure 17 for a drawing of the DU, DHU and DHUTF hangers and a typical installation.

3.1.18 CBH Series Hangers: The CBH series hangers are face-mounted and installed in inverted pairs. They are formed from No. 3 gage steel. They are used to support glulam beams or other approved wood members and are installed using Simpson Strong-Drive SDS series wood screws (SDS), which are addressed in ESR-2236. See Table 18A & 18B for hanger dimensions, fastener schedules and allowable loads. See Figure 18 for a drawing of the CBH hangers and a typical installation.

3.1.19 ACBH and SCBH Series Hangers: The ACBH series hangers are aluminum and the SCBH series hangers are steel. The ACBH and SCBH series hangers are face-mounted and installed in inverted pairs. They are used to support glulam beams and are installed using Simpson Strong-Drive SDCF series wood screws, which are addressed in ESR-3046. See Table 19 for hanger dimensions, fastener schedules and allowable loads. See Figure 19 for drawings of the ACBH and SCBH hangers and a typical installation.

3.1.20 HSKP Series Hangers: The HSKP series hangers are factory welded with a No. 3 gage steel back plate, ½" steel bearing plate and a No. 3 gage steel (for HSKP5.75x14.5 and HSKP5.75x17.0) or 3/8" steel (for HSKP5.75x19.5) knife plate. The HSKP is installed using Simpson Strong-Drive SDCF series wood screws, which are addressed in ESR-3046. See Table 20 for model numbers, hanger dimensions, fasteners shedules, allowable loads and installation instructions. See Figure 20 for hanger drawings, typical installation and bearing area requirements for the carried members.

3.2 Materials:

3.2.1 Hanger Material: All hangers described in this report, with the exception of the CBH, ACBH, SCBH, HSKP, HTU, HGUS and HHGU series hangers, are manufactured from galvanized steel complying with ASTM A653, SS designation, Grade 33, with a minimum yield strength, F_y, of 33,000 psi (227 MPa) and a minimum tensile strength, F_u, of 45,000 psi (310 MPa).

The HTU and HGUS series hangers are manufactured from galvanized steel complying with ASTM A653, SS designation, Grade 40, with a minimum yield strength, F_y, of 40,000 psi (276 MPa) and a minimum tensile strength, F_u, of 55,000 psi (379 MPa).

The HHGU and CBH series hangers are manufactured from nongalvanized steel complying with ASTM A1011 SS, Grade 33, with a minimum yield strength, F_y, of 33,000 psi (227 MPa) and a minimum tensile strength, F_u, of 52,000 psi (358 MPa).

The stud of the CBH hangers is manufactured from nongalvanized steel complying with ASTM A108 Grade 1018 with a minimum yield strength, F_y, of 70,000 psi (483 MPa) and a minimum tensile strength, F_u, of 80,000 psi (552 MPa).

The ACBH series hangers are manufactured from ASTM B221 6061-T6 aluminum with a minimum yield strength, F_y, of 38,000 psi (262 MPa) and a minimum tensile strength, F_u, of 44,000 psi (303 MPa).

The SCBH series hangers are manufactured from nongalvanized steel complying with ASTM A572, Grade 50 with minimum yield strength, F_y, of 50,000 psi (345 MPa) and a minimum tensile strength, F_u, of 65,000 psi (448 MPa).

The HSKP series hanger is manufactured from three components: a back plate, a bearing plate and a knife plate. The HSKP back plate and knife plate are manufactured from nongalvanized steel complying with ASTM A1011 SS, Grade 33, with a minimum yield strength, F_y, of 33,000 psi (227 MPa) and a minimum tensile strength, F_u, of 52,000 psi (358 MPa). The HSKP bearing plate is manufactured from nongalvanized steel complying with ASTM A572, Grade 50, with a minimum yield strength, F_y, of 50,000 psi (345 MPa) and a minimum tensile strength, F_u, of 65,000 psi (448 MPa).

Exception: The HSKP5.75x19.5 knife plate component is manufactured from nongalvanized steel complying with ASTM A36 with a minimum yield strength, F_y, of 36,000 psi (248 MPa) and a minimum tensile strength, F_u, of 58,000 psi (400 MPa).

Base-metal thicknesses for the hangers in this report are as follows:

NOMINAL THICKNESS (gage No. or inch)	MINIMUM BASE-METAL THICKNESS (inch)
1/2"	0.4900
3/8"	0.3650
No. 3	0.2285
No. 7	0.1715
No. 10	0.1275
No. 12	0.0975
No. 14	0.0685
No. 16	0.0555
No. 18	0.0444
No. 20	0.0335

For **SI:** 1 inch = 25.4 mm.

The thickness of the installed pairs of CBH, ACBH, and SCBH series hangers are shown in the applicable figures in this report.

With the exception of the CBH and SCBH hangers, the galvanized zinc coating for the steel hangers in Section 3.1 conforms to ASTM A924 and ASTM A653 with a G90 designation. Some models of these hangers (designated with a model number ending with Z) are available with a G185 zinc coating specification in accordance with ASTM A653. Some models (designated with a model number ending with HDG) are available with a hot-dip galvanization, also known as "batch" galvanization, in accordance with ASTM A123, with a minimum specified coating weight of 2.0 ounces of zinc per square foot of surface area (600 g/m^2), total for both sides. With the exception of the LUCZ, model numbers in this report do not include the Z or HDG ending, but the information shown applies.

The CBH series hanger product is available with an electrogalvanized finish in accordance with ASTM B633 or with a hot-dip galvanized finish in accordance with ASTM A123 (designated with a model number ending with HDG). The SCBH series hanger product has an electrogalvanized finish in accordance with ASTM B633.

The lumber treater or holder of this report (Simpson Strong-Tie Company) should be contacted for recommendations on minimum corrosion resistance of steel connectors in contact with the specific proprietary preservative treated or fire retardant treated lumber.

3.2.2 Wood: Wood headers/beams and columns to which the connectors are fastened must be either sawn lumber, structural glued-laminated timber, or engineered lumber having a minimum specific gravity of 0.50 (minimum equivalent specific gravity of 0.50 for engineered lumber), and having a maximum moisture content of 19 percent (16 percent for engineered lumber) except as noted in Section 4.1. The thickness of the supporting wood member (header) must be equal to or greater than the length of the fasteners specified in the tables in this report, or as required by wood member design, whichever is greater.

Supported wood members that are prefabricated wood I-joists or SCL must be addressed in a current evaluation report, which will specify the allowable shear capacity and allowable reactions at supports for the proprietary engineered wood lumber. When required, web stiffeners for prefabricated wood I-joists must comply with specifications noted in the applicable evaluation report for the I-joists. The hangers described in this evaluation report may support I-joists having a current ICC-ES evaluation report. The evaluation report for the prefabricated wood I-joist must specify a minimum bearing length that is equal to or less than the hanger bearing length. When the hangers are used to support prefabricated wood I-joists, joist end reactions must not exceed the allowable joist end reaction per the I-joist manufacturer's code report. For installation with engineered wood members, minimum allowable fastener spacing and end and edge distances, as specified in the applicable evaluation report for the engineered wood product, must be met.

3.2.3 Fasteners: Nails used for hangers described in this report must comply with ASTM F1667 and have the following minimum fastener dimensions and bending yield strengths (F_{yb}):

FASTENERS	SHANK DIAMETER (inches)	NAIL LENGTH (inches)	F_{yb} (psi)
10d × 1$^1/_2$	0.148	1$^1/_2$	90,000
10d	0.148	3	90,000
16d × 2$^1/_2$	0.162	2$^1/_2$	90,000
16d	0.162	3$^1/_2$	90,000

For **SI:** 1 inch = 25.4 mm, 1 psi = 6.895 kPa.

Unless otherwise indicated, fasteners listed in this report as 10d and 16d are 10d common and 16d common nails, respectively.

Some of the hangers and concealed beam hangers (CBH) described in this report are attached to the wood members using Simpson Strong-Drive SDS series wood screws addressed in ESR-2236. Other concealed beam hangers (ACBH and SCBH) and HSKP hangers described in this report are attached to wood members using SDCF Strong-Drive wood screws addressed in ESR-3046.

Fasteners used in contact with preservative treated or fire retardant treated lumber must comply with Section 2304.10.6 of the 2024 and 2021 IBC, Section 2304.10.5 of the 2018 and 2015 IBC, Section 2304.9.5 of the 2012, and applicable sections of the IRC. The chemical treatment manufacturer or this report holder (Simpson Strong-Tie Company) should be contacted for recommendations on minimum corrosion resistance of fasteners and connection capacities of fasteners used with the specific proprietary preservative treated or fire retardant treated lumber.

4.0 DESIGN AND INSTALLATION

4.1 Design:

The tabulated allowable loads shown in this report are based on allowable stress design (ASD) and include the load duration factor, C_D, corresponding with the applicable loads in accordance with the National Design Specification (NDS) for Wood Construction.

Tabulated allowable loads apply to products connected to wood used under dry conditions and where sustained temperatures are 100ºF (37.8ºC) or less. When products are installed to wood having a moisture content greater than 19 percent (16 percent for engineered wood products), or where wet service is expected, the allowable loads must be adjusted by the wet service factor, CM, specified in the NDS. When connectors are installed in wood that will experience sustained exposure to temperatures exceeding 100ºF (37.8ºC), the allowable loads in this report must be adjusted by the temperature factor, Ct, specified in the NDS.

Connected wood members must be analyzed for load-carrying capacity at the connection in accordance with the NDS and the applicable evaluation report for engineered wood products.

4.2 Installation:

Installation of the connectors must be in accordance with this evaluation report and the manufacturer's published installation instructions. In the event of a conflict between this report and the manufacturer's published installation instructions, this report governs.

5.0 CONDITIONS OF USE:

The Simpson Strong-Tie face-mount hangers described in this report comply with, or are suitable alternatives to what is specified in, those codes listed in Section 1.0 of this report, subject to the following conditions:

5.1 The connectors must be manufactured, identified and installed in accordance with this report and the manufacturer's published installation instructions. A copy of the instructions must be available at the jobsite at all times during installation.

5.2 Calculations showing compliance with this report must be submitted to the code official. The calculations must be prepared by a registered design professional where required by the statutes of the jurisdiction in which the project is to be constructed.

5.3 Adjustment factors noted in Section 4.1 and the applicable codes must be considered, where applicable.

5.4 Connected wood members and fasteners must comply, respectively, with Sections 3.2.2 and 3.2.3 of this report.

5.5 Use of connectors with preservative or fire retardant treated lumber must be in accordance with Section 3.2.1 of this report. Use of fasteners with preservative treated or fire retardant treated lumber must be in accordance with Section 3.2.3 of this report.

5.6 The face mount hangers are manufactured under a quality control program with inspections by ICC-ES.

6.0 EVIDENCE SUBMITTED

6.1 Data in accordance with the ICC-ES Acceptance Criteria for Joist Hangers and Similar Devices (AC13), dated April 2024.

6.2 Tests and calculations in accordance with the ICC-ES Acceptance Criteria for Dowel-Type Threaded Fasteners used in Wood (AC233), dated June 2023 (editorially revised June 2024).

7.0 IDENTIFICATION

7.1 The products described in this report are identified with a die-stamp or an adhesive label indicating the name of the manufacturer (Simpson Strong-Tie) the model number, and the number of an index evaluation report (ESR-2523) that is used as an identifier for the products addressed in this report.

7.2 The report holder's contact information is the following:

SIMPSON STRONG-TIE COMPANY INC.
5956 WEST LAS POSITAS BOULEVARD
PLEASANTON, CALIFORNIA 94588
(800) 999-5099
www.strongtie.com
jellis@strongtie.com

TABLE 1—ALLOWABLE LOADS FOR THE LU SERIES JOIST HANGERS

MODEL No.	DIMENSIONS[1] (inches)			FASTENERS[2] (Quantity-Type)		ALLOWABLE LOADS[3,4,5] (lbf)						
						Uplift[6]	Download					
						C_D = 1.6	C_D = 1.0		C_D = 1.15		C_D = 1.25	
	W	H	B	Header[5]	Joist		10d	16d	10d	16d	10d	16d
LU24	$1^9/_{16}$	$3^1/_8$	$1^1/_2$	4	2-10d x $1^1/_2$	240	465	555	530	630	570	655
LU26	$1^9/_{16}$	$4^3/_4$	$1^1/_2$	6	4-10d x $1^1/_2$	540	695	835	800	950	860	1,030
LU28	$1^9/_{16}$	$6^3/_8$	$1^1/_2$	8	6-10d x $1^1/_2$	850	930	1,110	1,065	1,180	1,145	1,180
LU210	$1^9/_{16}$	$7^{13}/_{16}$	$1^1/_2$	10	6-10d x $1^1/_2$	850	1,160	1,390	1,330	1,580	1,430	1,615

For **SI:** 1 inch = 25.4 mm, 1 lbf = 4.45 N.

[1]Refer to Figure 1 for definitions of hanger nomenclature (W, H, B).
[2]Refer to Section 3.2.3 of this report for nail sizes and required minimum physical properties.
[3]Tabulated allowable loads must be selected based on duration of load as permitted by the applicable building code.
[4]LU Series hangers provide torsional resistance, which is defined as a moment of not less than 75 pounds (334 N) times the depth of the joist at which the lateral movement of the top or bottom of the joist with respect to its vertical position is 0.125 inch (3.2 mm). The height, H, of the joist hanger must be at least 60 percent of the height of the joist unless additional lateral restraint is provided, as designed by others.
[5]The quantity of 10d or 16d common nails specified in the "Header" column under "Fasteners" is required to achieve the tabulated allowable loads shown in the Allowable Download "10d" or "16d" columns.
[6]Allowable uplift loads are for hangers installed with either 10d or 16d common nails into the supporting header/beam, and have been increased for wind or earthquake loading with no further increase allowed. The allowable uplift loads must be reduced when other load durations govern.

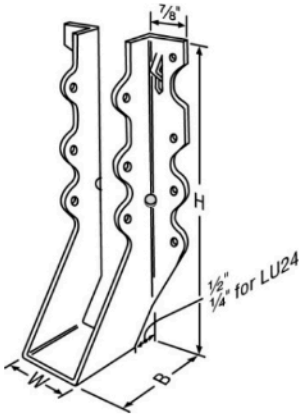

FIGURE 1—LU SERIES HANGER
(See Table 1)

TABLE 2—DIMENSIONS, NAILING SCHEDULES AND DESIGN VALUES FOR LUCZ SERIES HANGERS

MODEL No.	DIMENSIONS (inches)		FASTENERS [1] (Quantity-Type)		ALLOWABLE LOADS [2, 3, 4, 5] (lbf)					
	W	H	Into Supporting Member	Into Supported Member	Uplift [6]	Download				
					C_D=1.60	C_D =0.9	C_D =1.0	C_D =1.15	C_D =1.25	C_D =1.60
LUC26Z	$1^9/_{16}$	$4^3/_4$	6 - 10d x $1^1/_2$	4 - 10d x $1^1/_2$	730	640	710	810	875	1,100
			6 - 10d		730	640	710	810	875	1,100
			6 - 16d		730	760	845	965	1,040	1,315
LUC210Z	$1^9/_{16}$	$7^3/_4$	10 - 10d x $1^1/_2$	6 - 10d x $1^1/_2$	985	1,065	1,185	1,345	1,455	1,830
			10 - 10d		985	1,065	1,185	1,345	1,455	1,830
			10 - 16d		985	1,270	1,410	1,605	1,735	2,180

For **SI:** 1 inch = 25.4 mm, 1 pound = 4.45 N.

[1]Allowable loads correspond to installations where all pre-punched nail holes in the hanger are filled with nails. Refer to Section 3.2.3 of this report for nail sizes and required minimum physical properties.
[2]Tabulated allowable loads are for installations in wood members complying with Section 3.2.2 of this report.
[3]Tabulated loads must be selected based on the applicable load duration factor, C_D, as permitted by the applicable building code. See Sections 4.1 and 4.2 for design and installation requirements.
[4]The maximum allowable gap between the joist end and the supporting member is $^1/_8$ inch (3.2 mm).
[5]LUCZ series hangers provide torsional resistance, which is defined as a moment of not less than 75 pounds (334 N) times the depth of the joist at which the lateral movement of the top or bottom of the joist with respect to its vertical position is 0.125 inch (3.2 mm), for nominal 2x6 joists supported by the LUC26Z and nominal 2x10 joists supported by the LUC210Z.
[6]Allowable uplift loads have been increased for wind or earthquake loading with no further increase allowed. The tabulated allowable uplift loads must be reduced proportionally when other load durations govern.

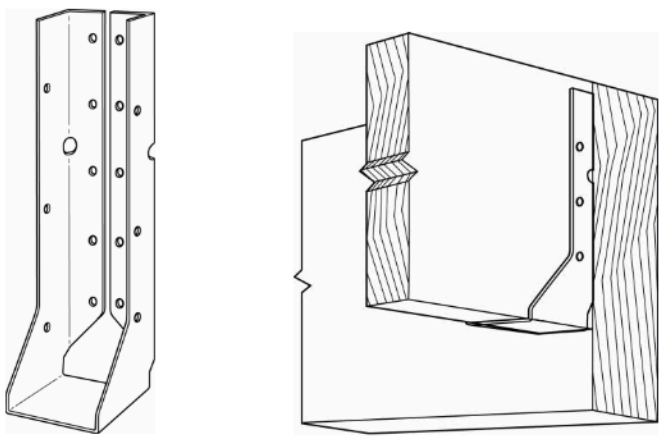

FIGURE 2—LUCZ SERIES HANGER AND INSTALLATION DETAIL

TABLE 3—ALLOWABLE LOADS FOR THE U SERIES JOIST HANGERS

MODEL No.	DIMENSIONS[1] (inches)			FASTENERS[2] (Quantity-Type)		ALLOWABLE LOADS[4,5,6] (lbf)						
						Uplift[6]	Download					
							C_D = 1.0		C_D = 1.15		C_D = 1.25	
	W	H	B	Header[5]	Joist	C_D = 1.6	10d	16d	10d	16d	10d	16d
U24	1 9/16	3 1/8	2	4	2-10d x 1 1/2	240	490	575	550	650	590	705
U26	1 9/16	4 3/4	2	6	4-10d x 1 1/2	535	730	865	830	980	890	1,055
U210	1 9/16	7 13/16	2	10	6-10d x 1 1/2	990	1,220	1,440	1,380	1,565	1,480	1,565
U214	1 9/16	10	2	12	8-10d x 1 1/2	990	1,465	1,730	1,655	1,955	1,775	2,110
U14	1 13/16	10 1/4	2	14	6-10d x 1 1/2	970	-	2,015	-	2,285	-	2,465
U24R	2 1/16	3 5/8	2	4	2-10d x 1 1/2	240	490	575	550	650	590	705
U26R	2 1/16	5 5/8	2	8	4-10d x 1 1/2	535	975	1,150	1,105	1,305	1,185	1,410
U210R	2 1/16	9 1/8	2	14	6-10d x 1 1/2	990	1,710	2,015	1,930	2,280	2,070	2,465
U3510/14	2 5/16	9	2	14	6-10d x 1 1/2	970	-	2,015	-	2,285	-	2,465
U3516/20	2 5/16	10 9/16	2	16	6-10d x 1 1/2	970	-	2,305	-	2,615	-	2,820
U34	2 9/16	3 3/8	2	4	2-10d x 1 1/2	240	490	575	550	650	590	705
U36	2 9/16	5 3/8	2	8	4-10d x 1 1/2	535	975	1,150	1,105	1,305	1,185	1,410
U310	2 9/16	8 7/8	2	14	6-10d x 1 1/2	990	1,710	2,015	1,930	2,280	2,070	2,465
U314	2 9/16	10 1/2	2	16	6-10d x 1 1/2	990	1,950	2,305	2,210	2,610	2,370	2,815
U24-2	3 1/8	3	2	4	2-10d	240	490	575	550	650	590	705
U26-2	3 1/8	5	2	8	4-10d	535	975	1,150	1,105	1,305	1,185	1,410
U210-2	3 1/8	8 1/2	2	14	6-10d	990	1,750	2,015	1,930	2,280	2,070	2,465
U44	3 9/16	2 7/8	2	4	2-10d	240	490	575	550	650	590	705
U46	3 9/16	4 7/8	2	8	4-10d	535	975	1,150	1,105	1,305	1,185	1,410
U410	3 9/16	8 3/8	2	14	6-10d	990	1,710	2,015	1,930	2,280	2,070	2,465
U414	3 9/16	10	2	16	6-10d	990	1,950	2,305	2,210	2,610	2,370	2,815
U44R	4 1/16	2 5/8	2	4	2-16d	240	490	575	550	650	590	705
U46R	4 1/16	4 5/8	2	8	4-16d	535	975	1,150	1,105	1,305	1,185	1,410
U410R	4 1/16	8 1/8	2	14	6-16d	990	1,710	2,015	1,930	2,280	2,070	2,465
U26-3	4 5/8	4 1/4	2	8	4-10d	535	975	1,150	1,105	1,305	1,185	1,410
U210-3	4 5/8	7 3/4	2	14	6-10d	990	1,710	2,015	1,930	2,280	2,070	2,465
U3510-2	4 3/4	8 3/4	2	14	6-10d x 1 1/2	970	-	2,015	-	2,285	-	2,465
U3512-2	4 3/4	11 1/4	2	16	6-10d x 1 1/2	970	-	2,305	-	2,615	-	2,820
U66	5 1/2	5	2	8	4-10d	535	975	1,150	1,105	1,305	1,185	1,410
U610	5 1/2	8 1/2	2	14	6-10d	990	1,710	2,015	1,930	2,280	2,070	2,465
U610	5 1/2	8 1/2	2	14	6-10d x 1 1/2	970	1,705	2,015	1,930	2,285	2,075	2,465
U66R	6	5	2	8	4-16d	535	975	1,150	1,105	1,305	1,185	1,410
U610R	6	8 1/2	2	14	6-16d	990	1,710	2,015	1,930	2,280	2,070	2,465

For **SI:** 1 inch = 25.4 mm, 1 lbf = 4.45 N.

[1]Refer to Figure 3 (this page) for definitions of hanger nomenclature (W, H, B).
[2]Refer to Section 3.2.3 of this report for nail sizes and required minimum physical properties.
[3]Tabulated allowable loads must be selected based on duration of load as permitted by the applicable building code.
[4]U Series hangers provide torsional resistance, which is defined as a moment of not less than 75 pounds (334 N) times the depth of the joist at which the lateral movement of the top or bottom of the joist with respect to the vertical position of the joist is 0.125 inch (3.2 mm). The height, H, of the joist hanger must be at least 60 percent of the height of the joist unless additional lateral restraint is provided, as designed by others.
[5]The quantity of 10d or 16d common nails specified in the "Header" column under "Fasteners" is required to achieve the tabulated allowable loads shown in the Allowable Download "10d" or "16d" columns.
[6]Allowable uplift loads are for hangers installed with either 10d or 16d common nails into the supporting header/beam, and have been increased for wind or earthquake loading with no further increase allowed. The allowable uplift loads must be reduced when other load durations govern.

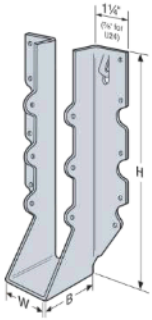

FIGURE 3—U SERIES JOIST HANGER

TABLE 4—ALLOWABLE LOADS FOR THE HU HANGER SERIES

MODEL NO.	HANGER DIMENSIONS[1] (inches)			FASTENERS[2] (Quantity-Type)		ALLOWABLE LOADS (lbf)[2,3,4]			
	W	H	B	Header	Joist	Uplift[5]	Download		
						C_D = 1.6	C_D = 1.0	C_D = 1.15	C_D = 1.25
HU26	$1^{9}/_{16}$	$3^{1}/_{16}$	$2^{1}/_{4}$	4-16d	2-10d x $1^{1}/_{2}$	305	595	670	720
HU28		$5^{1}/_{4}$		6-16d	4-10d x $1^{1}/_{2}$	605	895	1,010	1,080
HU210		$7^{1}/_{8}$		8-16d	4-10d x $1^{1}/_{2}$	605	1,190	1,345	1,440
HU212		9		10-16d	6-10d x $1^{1}/_{2}$	1,135	1,490	1,680	1,800
HU214		$10^{1}/_{8}$		12-16d	6-10d x $1^{1}/_{2}$	1,135	1,790	2,015	2,160
HU216		$12^{15}/_{16}$		18-16d	8-10d x $1^{1}/_{2}$	1,510	2,680	3,025	3,240
HU1.81/5	$1^{13}/_{16}$	$5^{3}/_{8}$	$2^{1}/_{2}$	16-16d	6-10d x $1^{1}/_{2}$	915	2,380	2,685	2,890
HU7		$6^{11}/_{16}$		16-16d	8-10d x $1^{1}/_{2}$	1,515	2,380	2,685	2,890
HU9		$9^{5}/_{16}$		24-16d	10-10d x $1^{1}/_{2}$	1,795	3,570	4,030	4,335
HU11		$11^{1}/_{16}$		30-16d	10-10d x $1^{1}/_{2}$	1,795	4,465	4,705	4,810
HU14		$13^{11}/_{16}$		36-16d	14-10d x $1^{1}/_{2}$	1,795	5,055	5,275	5,420
HU2.1/9	$2^{1}/_{8}$	$9^{3}/_{16}$	$2^{1}/_{2}$	14-16d	6-10d x $1^{1}/_{2}$	915	2,085	2,350	2,530
HU2.1/11		11		16-16d	6-10d x $1^{1}/_{2}$	915	2,380	2,685	2,890
HU359	$2^{3}/_{8}$	$8^{15}/_{16}$	$2^{1}/_{2}$	18-16d	10-10d x $1^{1}/_{2}$	1,795	2,680	3,020	3,250
HU3511		$11^{1}/_{16}$		22-16d	10-10d x $1^{1}/_{2}$	1,795	3,275	3,695	3,970
HU3514		$13^{1}/_{2}$		24-16d	12-10d x $1^{1}/_{2}$	1,795	3,570	4,030	4,335
HU3516/22		$14^{1}/_{4}$		20-16d	8-10d x $1^{1}/_{2}$	1,515	2,975	3,360	3,610
HU3524/30		18		24-16d	14-10d x $1^{1}/_{2}$	1,795	3,570	4,030	4,335
HU34	$2^{9}/_{16}$	$3^{3}/_{8}$	$2^{1}/_{2}$	4-16d	2-10d x $1^{1}/_{2}$	380	595	670	720
HU36		$5^{3}/_{16}$		8-16d	4-10d x $1^{1}/_{2}$	605	1,190	1,345	1,440
HU38		$6^{9}/_{16}$		10-16d	4-10d x $1^{1}/_{2}$	605	1,490	1,680	1,800
HU310		$8^{7}/_{8}$		14-16d	6-10d x $1^{1}/_{2}$	915	2,085	2,350	2,530
HU312		$10^{5}/_{8}$		16-16d	6-10d x $1^{1}/_{2}$	915	2,380	2,685	2,890
HU314		$12^{3}/_{8}$		18-16d	8-10d x $1^{1}/_{2}$	1,515	2,680	3,020	3,250
HU316		$14^{1}/_{8}$		20-16d	8-10d x $1^{1}/_{2}$	1,515	2,975	3,360	3,610
HU2.75/10	$2^{3}/_{4}$	9	$2^{1}/_{2}$	18-16d	10-10d x $1^{1}/_{2}$	1,795	2,680	3,020	3,250
HU2.75/12		$10^{3}/_{4}$		22-16d	10-10d x $1^{1}/_{2}$	1,795	3,275	3,695	3,970
HU2.75/14		13		24-16d	14-10d x $1^{1}/_{2}$	1,795	3,570	4,030	4,335
HU24-2	$3^{1}/_{8}$	$3^{1}/_{16}$	$2^{1}/_{2}$	4-16d	2-10d	380	595	670	720
HU26-2		$4^{15}/_{16}$		8-16d	4-10d	755	1,190	1,345	1,440
HU28-2		$6^{5}/_{16}$		10-16d	4-10d	755	1,490	1,680	1,800
HU210-2		$8^{9}/_{16}$		18-16d	10-10d	1,795	2,680	3,020	3,250
HU212-2		$10^{9}/_{16}$		22-16d	10-10d	1,795	3,275	3,695	3,970
HU214-2		$12^{1}/_{8}$		18-16d	8-10d	1,510	2,680	3,025	3,240
HU216-2		$13^{7}/_{8}$		26-16d	12-10d	1,795	3,870	4,365	4,695
HU3.25/10.5	$3^{1}/_{4}$	9	$2^{1}/_{2}$	22-16d	10-10d	1,795	3,275	3,695	3,970
HU3.25/12		11		24-16d	12-10d	1,795	3,570	4,030	4,335
HU44	$3^{9}/_{16}$	$2^{7}/_{8}$	$2^{1}/_{2}$	4-16d	2-10d	380	595	670	720
HU46		$4^{11}/_{16}$		8-16d	4-10d	755	1,190	1,345	1,440
HU48		$6^{3}/_{16}$		10-16d	4-10d	755	1,490	1,680	1,800
HU410		$8^{3}/_{8}$		14-16d	6-10d	1,135	2,085	2,350	2,520
HU412		$10^{5}/_{16}$		16-16d	6-10d	1,135	2,385	2,690	2,880
HU414		$11^{7}/_{8}$		18-16d	8-10d	1,510	2,680	3,025	3,240
HU416		$13^{5}/_{8}$		20-16d	8-10d	1,510	2,980	3,360	3,600

Please refer to next page for continuation of Table 4.

TABLE 4 (CONTINUED)—ALLOWABLE LOADS FOR THE HU HANGER SERIES

MODEL NO.	HANGER DIMENSIONS[1] (inches)			FASTENERS[2] (Quantity-Type)		ALLOWABLE LOADS (lbf)[3,4,5]			
						Uplift[6]	Download		
	W	H	B	Header	Joist	C_D = 1.6	C_D = 1.0	C_D = 1.15	C_D = 1.25
HU4.12/9	$4^1/_8$	$8^5/_8$	$2^1/_2$	18-16d	10-10d	1,795	2,680	3,020	3,250
HU4.12/11		$10^5/_{16}$		22-16d	10-10d	1,795	3,275	3,695	3,970
HU4.28/9	$4^9/_{32}$	9	$2^1/_2$	18-16d	8-10d	1,515	2,680	3,020	3,250
HU4.28/11		11		22-16d	8-10d	1,515	3,275	3,695	3,970
HU26-3	$4^{11}/_{16}$	$4^9/_{16}$	$2^1/_2$	8-16d	4-10d	755	1,190	1,345	1,440
HU210-3		8		14-16d	6-10d	1,135	2,085	2,350	2,520
HU212-3		$9^3/_4$		16-16d	6-10d	1,135	2,385	2,690	2,880
HU214-3		$12^1/_{16}$		18-16d	8-10d	1,510	2,680	3,025	3,240
HU216-3		$13^7/_8$		20-16d	8-10d	1,510	2,980	3,360	3,600
HU4.75/9	$4^3/_4$	9	$2^1/_2$	18-16d	8-10d	1,515	2,680	3,020	3,250
HU4.75/11		11		22-16d	8-10d	1,515	3,275	3,695	3,970
HU3514-2		$13^1/_4$		18-16d	8-10d	1,515	2,680	3,020	3,250
HU3516-2		$15^1/_4$		26-16d	12-10d	1,795	3,870	4,365	4,695
HU3520-2		$19^1/_4$		26-16d	12-10d	1,795	3,870	4,365	4,695
HU310-2	$5^1/_8$	$7^{13}/_{16}$	$2^1/_2$	14-16d	6-10d	1,135	2,085	2,350	2,530
HU312-2		$10^5/_8$		16-16d	6-10d	1,135	2,380	2,685	2,890
HU314-2		$12^5/_8$		18-16d	8-10d	1,510	2,680	3,020	3,250
HU5.125/12	$5^1/_4$	$10^1/_4$	$2^1/_2$	22-16d	8-16d	1,515	3,275	3,695	3,970
HU5.125/13.5		$13^1/_4$		26-16d	12-16d	2,695	3,870	4,365	4,695
HU5.125/16		$13^7/_8$		26-16d	12-16d	2,695	3,870	4,365	4,695
HU66	$5^1/_2$	$4^3/_{16}$	$2^1/_2$	8-16d	4-16d	895	1,190	1,345	1,440
HU68		$5^{13}/_{16}$		10-16d	4-16d	895	1,490	1,680	1,800
HU610		$7^5/_8$		14-16d	6-16d	1,345	2,085	2,350	2,520
HU612		$9^3/_8$		16-16d	6-16d	1,345	2,385	2,690	2,880
HU614		$11^5/_8$		18-16d	8-16d	1,780	2,680	3,025	3,240
HU616		$13^3/_8$		20-16d	8-16d	1,780	2,980	3,360	3,600
HU210-4	$6^1/_8$	$8^3/_8$	$2^1/_2$	14-16d	6-16d	1,345	2,085	2,350	2,520
HU410-2	$7^1/_8$	$8^9/_{16}$	$2^1/_2$	18-16d	8-16d	1795	2680	3020	3250
HU412-2		$10^{13}/_{16}$		22-16d	8-16d	1795	3275	3695	3970
HU414-2		$13^7/_8$		26-16d	12-16d	2695	3870	4365	4695
HU88	$7^1/_2$	$6^5/_8$	$2^1/_2$	10-16d	4-16d	895	1,490	1,680	1,800
HU810		$8^3/_8$		14-16d	6-16d	1,345	2,085	2,350	2,520
HU812		$10^1/_8$		16-16d	6-16d	1,345	2,385	2,690	2,880
HU814		$11^7/_8$		18-16d	8-16d	1,780	2,680	3,025	3,240
HU816		$13^5/_8$		20-16d	8-16d	1,780	2,680	3,360	3,600

For **SI:** 1 inch = 25.4 mm, 1 lbf = 4.45 N.

[1]Refer to Figures 4A and 4B for definitions of hanger nomenclature (W, H, B).
[2]Refer to Section 3.2.3 of this report for nail sizes and required minimum physical properties.
[3]HU series hangers with widths (W) equal to or greater than $2^9/_{16}$ inches (65 mm) are available with header flanges turned in (concealed) and are identified with the model designation HUC#. See Figure 4B.
[4]Tabulated allowable loads must be selected based on duration of load as permitted by the applicable building code.
[5]HU Series hangers provide torsional resistance, which is defined as a moment of not less than 75 pounds (334 N) times the depth of the joist at which the lateral movement of the top or bottom of the joist with respect to the vertical position of the joist is 0.125 inch (3.2 mm). The height, H, of the joist hanger must be at least 60 percent of the height of the joist unless additional lateral restraint is provided, as designed by others.
[6]Allowable uplift loads have been increased for wind or earthquake loading with no further increase allowed. The allowable uplift loads must be reduced when other load durations govern.

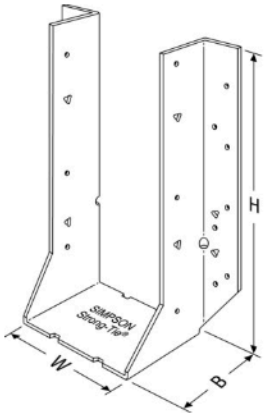

FIGURE 4A—HU SERIES HANGER
(See Table 4)

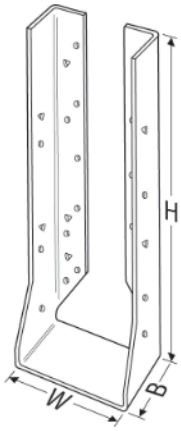

FIGURE 4B—HUC SERIES HANGER
(See Table 4, Footnote 4)

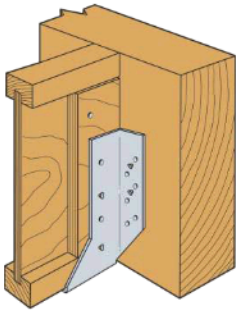

FIGURE 4C—TYPICAL HU HANGER

TABLE 5—ALLOWABLE LOADS FOR THE HUCQ SERIES JOIST HANGERS

MODEL NO.	DIMENSIONS[1] (inches)			FASTENERS (Quantity-Type)		ALLOWABLE LOADS[2,3,4] (lbf)			
						Uplift[4]	Download		
	W	H	B	Header	Joist	C_D=1.6	C_D=1.0	C_D=1.15	C_D=1.25
HUCQ1.81/9-SDS	$1^{13}/_{16}$	9	3	8-SDS $^1/_4$" x $1^3/_4$"	4-SDS $^1/_4$" x $1^3/_4$"	1,310	2,000	2,300	2,500
HUCQ1.81/11-SDS	$1^{13}/_{16}$	11	3	10-SDS $^1/_4$" x $1^3/_4$"	4-SDS $^1/_4$" x $1^3/_4$"	1,310	2,500	2,875	3,125
HUCQ310-SDS	$2^9/_{16}$	9	3	8-SDS $^1/_4$" x $2^1/_2$"	4-SDS $^1/_4$" x $2^1/_2$"	1,220	3,120	3,590	3,685
HUCQ210-2-SDS	$3^1/_4$	9	3	12-SDS $^1/_4$" x $2^1/_2$"	6-SDS $^1/_4$" x $2^1/_2$"	1,220	4,680	4,865	4,865
HUCQ410-SDS	$3^9/_{16}$	9	3	12-SDS $^1/_4$" x $2^1/_2$"	6-SDS $^1/_4$" x $2^1/_2$"	2,365	4,500	4,500	4,500
HUCQ412-SDS	$3^9/_{16}$	11	3	14-SDS $^1/_4$" x $2^1/_2$"	6-SDS $^1/_4$" x $2^1/_2$"	2,365	5,045	5,045	5,045
HUCQ210-3-SDS	$4^5/_8$	9	3	12-SDS $^1/_4$" x $2^1/_2$"	6-SDS $^1/_4$" x $2^1/_2$"	2,215	4,680	4,865	4,865
HUCQ5.25/9-SDS	$5^1/_4$	9	3	12-SDS $^1/_4$" x $2^1/_2$"	6-SDS $^1/_4$" x $2^1/_2$"	2,365	4,500	4,500	4,500
HUCQ5.25/11-SDS	$5^1/_4$	11	3	14-SDS $^1/_4$" x $2^1/_2$"	6-SDS $^1/_4$" x $2^1/_2$"	2,365	5,045	5,045	5,045
HUCQ610-SDS	$5^9/_{16}$	9	3	12-SDS $^1/_4$" x $2^1/_2$"	6-SDS $^1/_4$" x $2^1/_2$"	2,365	4,680	5,210	5,210
HUCQ612-SDS	$5^9/_{16}$	11	3	14-SDS $^1/_4$" x $2^1/_2$"	6-SDS $^1/_4$" x $2^1/_2$"	2,365	5,210	5,210	5,210

For **SI:** 1 inch = 25.4 mm, 1 lbf = 4.45 N.

[1]Refer to Figure 5 (this page) for definitions of hanger nomenclature (W, H, B).
[2]Tabulated allowable loads must be selected based on duration of load as permitted by the applicable building code.
[3]The uplift loads have been increased for wind or earthquake loading with no further increase allowed. The allowable uplift loads must be reduced when other load durations govern.
[4]For supported members other than glulam beams, lateral support must be provided at the ends in accordance with Section 2308.8.6 of the 2024 IBC (Section 2308.4.6 of the 2021, 2018, 2015 and 2012 IBC) or Section R502.7 of the IRC.

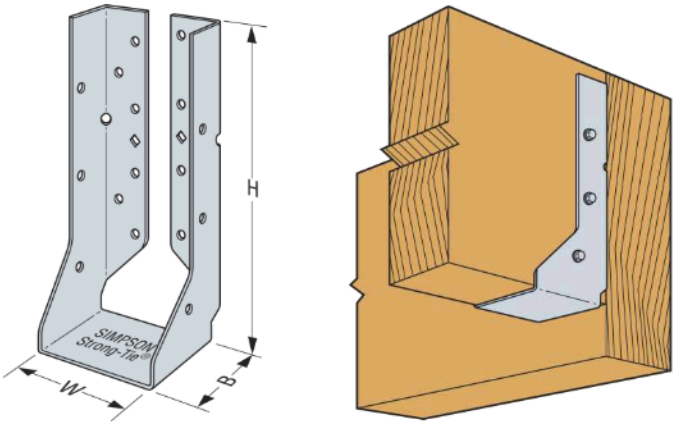

FIGURE 5—DIMENSIONS AND TYPICAL INSTALLATION OF THE HUCQ SERIES HANGERS

TABLE 6—ALLOWABLE LOADS FOR THE LUS SERIES JOIST HANGERS

MODEL NO.	DIMENSIONS[1] (inches)			COMMON NAILS[2] (Quantity-Type)		ALLOWABLE LOADS[3,4] (lbf)			
						Uplift[6]	Download		
	W	H	B	Header	Joist[5]	C_D = 1.6	C_D = 1.0	C_D = 1.15	C_D = 1.25
LUS24	$1^9/_{16}$	$3^1/_8$	$1^3/_4$	4-10d	2-10d	435	670	765	820
LUS26	$1^9/_{16}$	$4^3/_4$	$1^3/_4$	4-10d	4-10d	1,165	865	990	1,060
LUS28	$1^9/_{16}$	$6^5/_8$	$1^3/_4$	6-10d	4-10d	1,165	1,100	1,260	1,350
LUS210	$1^9/_{16}$	$7^{13}/_{16}$	$1^3/_4$	8-10d	4-10d	1,165	1,335	1,530	1,640
LUS36	$2^9/_{16}$	$5^1/_4$	2	4-16d	4-16d	1,060	1,030	1,170	1,265
LUS310	$2^9/_{16}$	$7^9/_{32}$	2	6-16d	4-16d	1,070	1,315	1,490	1,610
LUS24-2	$3^1/_8$	$3^1/_8$	2	4-16d	2-16d	410	800	905	980
LUS26-2	$3^1/_8$	$4^{15}/_{16}$	2	4-16d	4-16d	1,060	1,030	1,170	1,265
LUS28-2	$3^1/_8$	7	2	6-16d	4-16d	1,060	1,315	1,490	1,610
LUS210-2	$3^1/_8$	$8^{15}/_{16}$	2	8-16d	6-16d	1,445	1,830	2,075	2,245
LUS214-2	$3^1/_8$	$10^{15}/_{16}$	2	10-16d	6-16d	1,445	2,110	2,395	2,590
LUS44	$3^9/_{16}$	3	2	4-16d	2-16d	410	800	905	980
LUS46	$3^9/_{16}$	$4^3/_4$	2	4-16d	4-16d	1,060	1,030	1,170	1,265
LUS48	$3^9/_{16}$	$6^3/_4$	2	6-16d	4-16d	1,060	1,315	1,490	1,610
LUS410	$3^9/_{16}$	$8^3/_4$	2	8-16d	6-16d	1,445	1,830	2,075	2,245
LUS414	$3^9/_{16}$	$10^3/_4$	2	10-16d	6-16d	1,445	2,110	2,395	2,590
LUS26-3	$4^5/_8$	$4^1/_8$	2	4-16d	4-16d	1,060	1,030	1,170	1,265
LUS28-3	$4^5/_8$	$6^1/_4$	2	6-16d	4-16d	1,060	1,315	1,490	1,610
LUS210-3	$4^5/_8$	$8^{13}/_{16}$	2	8-16d	6-16d	1,445	1,830	2,075	2,245

For **SI:** 1 inch = 25.4 mm, 1 lbf = 4.45 N.

[1]Refer to Figure 6 (this page) for definitions of hanger nomenclature (W, H, B).
[2]Refer to Section 3.2.3 of this report for nail sizes and required minimum physical properties.
[3]Tabulated allowable loads must be selected based on duration of load as permitted by the applicable building code.
[4]LUS Series hangers provide torsional resistance, which is defined as a moment of not less than 75 pounds (334 N) times the depth of the joist at which the lateral movement of the top or bottom of the joist with respect to the vertical position of the joist is 0.125 inch (3.2 mm). The height, H, of the joist hanger must be at least 60 percent of the height of the joist unless additional lateral restraint is provided, as designed by others.
[5]Joist nails must be driven at a 45 degree angle through the joist into the header/beam (double shear nailing) to achieve the tabulated loads.
[6]Allowable uplift loads have been increased for wind or earthquake loading with no further increase is allowed. The allowable uplift loads must be reduced when other load durations govern.

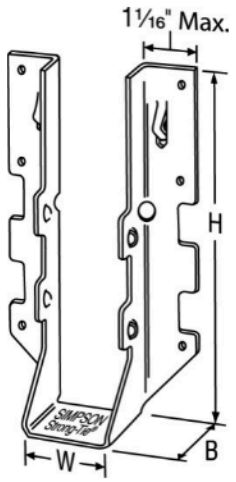

FIGURE 6—LUS SERIES HANGER
(See Table 6)

TABLE 7—ALLOWABLE LOADS FOR THE MUS SERIES HANGERS

MODEL NO.	DIMENSIONS[1] (inches)			COMMON NAILS[2] (Quantity-Type)		ALLOWABLE LOADS[3,4] (lbf)			
	W	H	B	Header	Joist[5]	Uplift[6]	Download		
						C_D = 1.6	C_D = 1.0	C_D = 1.15	C_D = 1.25
MUS26	$1^9/_{16}$	$5^3/_{16}$	2	6–10d	6–10d	930	1,295	1,480	1,560
MUS28	$1^9/_{16}$	$6^3/_4$	2	8–10d	8–10d	1,320	1,730	1,975	2,125

For **SI:** 1 inch = 25.4 mm, 1 lbf = 4.45 N.

[1]Refer to Figure 7 (this page) for definitions of hanger nomenclature (W, H, B).
[2]Refer to Section 3.2.3 of this report for nail sizes and required minimum physical properties.
[3]Tabulated allowable loads must be selected based on duration of load as permitted by the applicable building code.
[4]MUS series hangers provide torsional resistance, which is defined as a moment of not less than 75 pounds (334 N) times the depth of the joist at which the lateral movement of the top or bottom of the joist with respect to the vertical position of the joist is 0.125 inch (3.2 mm). The height, H, of the joist hanger must be at least 60 percent of the height of the joist unless additional lateral restraint is provided, as designed by others.
[5]Joist nails must be driven at a 45 degree angle through the joist into the header/beam (double shear nailing) to achieve the tabulated loads.
[6]Allowable uplift loads have been increased for wind or earthquake loading with no further increase is allowed. The allowable uplift loads must be reduced when other load durations govern.

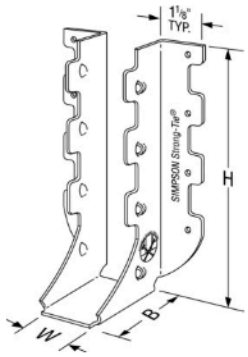

FIGURE 7—MUS HANGER (See Table 7)

TABLE 8—ALLOWABLE LOADS FOR THE HUS SERIES HANGERS

MODEL NO.	DIMENSIONS[1] (inches)			COMMON NAILS[2] (Quantity-Type)		ALLOWABLE LOADS[3,4] (lbf)			
						Uplift[6]	Download		
	W	H	B	Header	Joist[5]	C_D = 1.6	C_D = 1.0	C_D = 1.15	C_D = 1.25
HUS26	$1^5/_8$	$5^3/_8$	3	14-16d	6-16d	1,320	2,735	3095	3230
HUS28	$1^5/_8$	$7^1/_{16}$	3	22-16d	8-16d	1,760	4095	4095	4095
HUS210	$1^5/_8$	$9^1/_{16}$	3	30-16d	10-16d	2,635	5,450	5,795	5,830
HUS1.81/10	$1^{13}/_{16}$	$8^7/_8$	3	30-16d	10-16d	2,675	5,510	5,830	5,830
HUS46	$3^9/_{16}$	$4^5/_{16}$	2	4-16d	4-16d	1,165	1,090	1,225	1,320
HUS48	$3^9/_{16}$	$6^{15}/_{16}$	2	6-16d	6-16d	1,320	1,630	1,840	1,980
HUS410	$3^9/_{16}$	$8^{15}/_{16}$	2	8-16d	8-16d	3,265	2,175	2,455	2,640
HUS412	$3^9/_{16}$	$10^3/_4$	2	10-16d	10-16d	3,435	2,720	3,070	3,300
HUS26-2	$3^1/_8$	$5^3/_{16}$	2	4-16d	4-16d	1,165	1,090	1,225	1,320
HUS28-2	$3^1/_8$	$7^3/_{16}$	2	6-16d	6-16d	1,320	1,630	1,840	1,980
HUS210-2	$3^1/_8$	$9^3/_{16}$	2	8-16d	8-16d	3,285	2,175	2,455	2,640
HUS212-2	$3^1/_8$	11	2	10-16d	10-16d	3,435	2,720	3,070	3,300

For **SI:** 1 inch = 25.4 mm, 1 pound = 4.45 N.

[1]Refer to Figure 8 (this page) for definitions of hanger nomenclature (W, H, B).
[2]Refer to Section 3.2.3 of this report for nail sizes and required minimum physical properties.
[3]Tabulated allowable loads must be selected based on duration of load as permitted by the applicable building code.
[4]HUS series hangers provide torsional resistance, which is defined as a moment of not less than 75 pounds (334 N) times the depth of the joist at which the lateral movement of the top or bottom of the joist with respect to the vertical position of the joist is 0.125 inch (3.2 mm). The height, H, of the joist hanger must be at least 60 percent of the height of the joist unless additional lateral restraint is provided, as designed by others.
[5]Joist nails must be driven at a 45 degree angle through the joist into the header/beam (double shear nailing) to achieve the tabulated loads.
[6]Allowable uplift loads have been increased for wind or earthquake loading with no further increase is allowed. The allowable uplift loads must be reduced when other load durations govern.

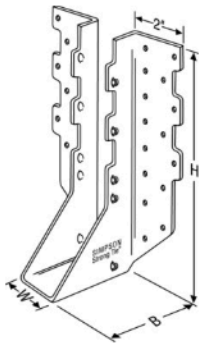

FIGURE 8—HUS SERIES HANGER (See Table 8)

TABLE 9—ALLOWABLE LOADS FOR THE HHUS SERIES HANGERS

MODEL NO.	DIMENSIONS[1] (inches)			COMMON NAILS[2] (Quantity-Type)		ALLOWABLE LOADS[3,4] (lbf)			
	W	H	B	Header	Joist[5]	Uplift[6]	Download		
						C_D = 1.6	C_D = 1.0	C_D = 1.15	C_D = 1.25
HHUS26-2	$3^5/_{16}$	$5^7/_{16}$	3	14-16d	6-16d	1,320	2,820	3,185	3,425
HHUS28-2	$3^5/_{16}$	$7^1/_2$	3	22-16d	8-16d	1,760	4,255	4,800	5,165
HHUS210-2	$3^5/_{16}$	$9^1/_8$	3	30-16d	10-16d	3,550	5,690	6,420	6,485
HHUS46	$3^5/_8$	$5^1/_4$	3	14-16d	6-16d	1,320	2,820	3,185	3,425
HHUS48	$3^5/_8$	$7^1/_8$	3	22-16d	8-16d	1,760	4,255	4,800	5,165
HHUS410	$3^5/_8$	9	3	30-16d	10-16d	3,550	5,690	6,420	6,485
HHUS5.50/10	$5^1/_2$	9	3	30-16d	10-16d	3,550	5,690	6,420	6,485
HHUS7.25/10	$7^1/_4$	9	$3^5/_{16}$	30-16d	10-16d	3,550	5,690	6,420	6,485

For **SI:** 1 inch = 25.4 mm, 1 lbf = 4.45 N.

[1]Refer to Figure 9 (this page) for definitions of hanger nomenclature (W, H, B).
[2]Refer to Section 3.2.3 of this report for nail sizes and required minimum physical properties.
[3]Tabulated allowable loads must be selected based on duration of load as permitted by the applicable building code.
[4]HUS series hangers provide torsional resistance, which is defined as a moment of not less than 75 pounds (334 N) times the depth of the joist at which the lateral movement of the top or bottom of the joist with respect to the vertical position of the joist is 0.125 inch (3.2 mm). The height, H, of the joist hanger must be at least 60 percent of the height of the joist unless additional lateral restraint is provided, as designed by others.
[5]Joist nails must be driven at a 45 degree angle through the joist into the header/beam to achieve the tabulated loads.
[6]Allowable uplift loads have been increased for wind or earthquake loading with no further increase is allowed. The allowable uplift loads must be reduced when other load durations govern.

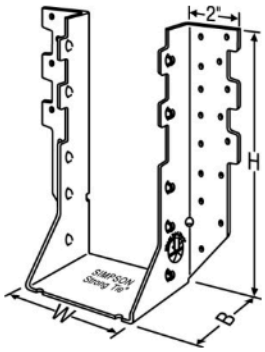

FIGURE 9—HHUS SERIES HANGER (See Table 9)

TABLE 10—ALLOWABLE LOADS FOR THE HGUS SERIES JOIST HANGERS

MODEL NO.	DIMENSIONS[1] (Inches)			FASTENERS[2] (Quantity-Type)		ALLOWABLE LOADS[3,6] (lbf)			
						Uplift[5]	Download		
	W	H	B	Header	Joist[4]	C_D = 1.6	C_D = 1.0	C_D = 1.15	C_D = 1.25
HGUS26	$1^5/_8$	$5^3/_8$	5	20-16d	8-16d	1,040	4,355	4,875	5,230
HGUS28	$1^5/_8$	$7^1/_8$	5	36-16d	12-16d	1,650	7,275	7,275	7,275
HGUS210	$1^5/_8$	$9^1/_8$	5	46-16d	16-16d	2,090	9,100	9,100	9,100
HGUS2.75/10	$2^3/_4$	$8^7/_8$	4	46-16d	16-16d	4,095	9,100	9,100	9,100
HGUS2.75/12	$2^3/_4$	$10^7/_8$	4	56-16d	20-16d	5,205	11,915	13,050	13,545
HGUS2.75/14	$2^3/_4$	$12^7/_8$	4	66-16d	22-16d	5,360	12,900	13,700	14,240
HGUS3.25/10	$3^1/_4$	$8^5/_8$	4	46-16d	16-16d	4,095	9,100	9,100	9,100
HGUS3.25/12	$3^1/_4$	$10^5/_8$	4	56-16d	20-16d	5,205	11,915	13,330	14,290
HGUS26-2	$3^7/_{16}$	$5^7/_{16}$	4	20-16d	8-16d	2,155	4,355	4,875	5,230
HGUS28-2	$3^7/_{16}$	$7^3/_{16}$	4	36-16d	12-16d	3,235	7,460	7,460	7,460
HGUS210-2	$3^7/_{16}$	$9^3/_{16}$	4	46-16d	16-16d	4,095	9,100	9,100	9,100
HGUS46	$3^5/_8$	$5^5/_{16}$	4	20-16d	8-16d	2,155	4,355	4,875	5,230
HGUS48	$3^5/_8$	$7^1/_{16}$	4	36-16d	12-16d	3,235	7,460	7,460	7,460
HGUS410	$3^5/_8$	$9^1/_{16}$	4	46-16d	16-16d	4,095	9,100	9,100	9,100
HGUS412	$3^5/_8$	$10^7/_{16}$	4	56-16d	20-16d	5,205	11,915	13,330	14,290
HGUS414	$3^5/_8$	$12^7/_{16}$	4	66-16d	22-16d	5,360	13,860	14,350	14,350
HGUS26-3	$4^{15}/_{16}$	$5^7/_{16}$	4	20-16d	8-16d	2,155	4,355	4,875	5,230
HGUS28-3	$4^{15}/_{16}$	$7^3/_{16}$	4	36-16d	12-16d	3,235	7,460	7,460	7,460
HGUS210-3	$4^{15}/_{16}$	$9^3/_{16}$	4	46-16d	16-16d	4,095	9,100	9,100	9,100
HGUS212-3	$4^{15}/_{16}$	$10^3/_4$	4	56-16d	20-16d	5,205	11,915	13,330	14,290
HGUS214-3	$4^{15}/_{16}$	$12^3/_4$	4	66-16d	22-16d	5,360	13,860	14,350	14,350
HGUS5.25/10	$5^1/_4$	$9^1/_{16}$	4	46-16d	16-16d	4,095	9,100	9,100	9,100
HGUS5.25/12	$5^1/_4$	$10^5/_8$	4	56-16d	20-16d	5,205	11,915	13,330	14,290
HGUS5.5/8	$5^1/_2$	$6^{15}/_{16}$	4	36-16d	12-16d	3,235	7,460	7,460	7,460
HGUS5.5/10	$5^1/_2$	$8^{15}/_{16}$	4	46-16d	16-16d	4,095	9,100	9,100	9,100
HGUS5.5/12	$5^1/_2$	$10^1/_2$	4	56-16d	20-16d	5,205	11,915	13,330	14,290
HGUS5.5/14	$5^1/_2$	$12^1/_2$	4	66-16d	22-16d	5,515	9,695	9,695	9,695
HGUS5.62/10	$5^5/_8$	$8^7/_8$	4	46-16d	16-16d	4,095	9,100	9,100	9,100
HGUS5.62/12	$5^5/_8$	$10^7/_{16}$	4	56-16d	20-16d	5,205	11,915	13,330	14,290
HGUS5.62/14	55/8	$12^7/_{16}$	4	66-16d	22-16d	5,515	9,695	9,695	9,695
HGUS26-4	$6^9/_{16}$	$5^7/_{16}$	4	20-16d	8-16d	2,155	4,355	4,875	5,230
HGUS28-4	$6^9/_{16}$	$7^3/_{16}$	4	36-16d	12-16d	3,235	7,460	7,460	7,460
HGUS210-4	$6^9/_{16}$	$9^3/_{16}$	4	46-16d	16-16d	4,095	9,100	9,100	9,100
HGUS212-4	$6^9/_{16}$	$10^9/_{16}$	4	56-16d	20-16d	5,205	11,915	13,330	14,290
HGUS214-4	$6^9/_{16}$	$12^9/_{16}$	4	66-16d	22-16d	5,360	13,735	14,360	14,360
HGUS6.88/10	$6^7/_8$	$8^{13}/_{16}$	4	46-16d	16-16d	4,095	9,100	9,100	9,100
HGUS6.88/12	$6^7/_8$	$10^{13}/_{16}$	4	56-16d	20-16d	5,205	11,915	13,330	14,290
HGUS6.88/14	$6^7/_8$	$12^{13}/_{16}$	4	66-16d	22-16d	5,515	9,695	9,695	9,695
HGUS7.25/8	$7^1/_4$	$7^1/_4$	4	36-16d	12-16d	3,235	7,460	7,460	7,460
HGUS7.25/10	$7^1/_4$	$8^5/_8$	4	46-16d	16-16d	4,095	9,100	9,100	9,100
HGUS7.25/12	$7^1/_4$	$10^5/_8$	4	56-16d	20-16d	5,205	11,915	13,330	14,290
HGUS7.25/14	$7^1/_4$	$12^5/_8$	4	66-16d	22-16d	5,515	9,695	9,695	9,695
HGUS7.37/10	$7^3/_8$	$8^9/_{16}$	4	46-16d	16-16d	4,065	9,095	9,095	9,095
HGUS7.37/12	$7^3/_8$	$10^9/_{16}$	4	56-16d	20-16d	5,205	11,915	13,330	14,290
HGUS7.37/14	$7^3/_8$	$12^9/_{16}$	4	66-16d	22-16d	5,515	13,735	14,360	14,360

For **SI:** 1 inch = 25.4 mm, 1 lbf = 4.45 N.

[1]Refer to Figure 10 (this page) for definitions of hanger nomenclature (W, H, B).
[2]Refer to Section 3.2.3 of this report for nail sizes and required minimum physical properties.
[3]Tabulated allowable loads must be selected based on duration of load as permitted by the applicable building code.
[4]Joist nails must be driven at a 45 degree angle through the joist into the header/beam (double shear nailing) to achieve tabulated loads.
[5]Allowable uplift loads have been increased for wind or earthquake loading with no further increase allowed. The allowable uplift loads must be reduced when other load durations govern.
[6]HGUS series hangers provide torsional resistance, which is defined as the moment of not less than 75 pounds (334 N) times the depth of the joist at which the lateral movement of the top or bottom of the joist with respect to the vertical position of the joist is 0.125" (3.2 mm). The height, H, of the joist hanger must be at least 60 percent of the height of the joist unless additional lateral restraint is provided, as designed by others.

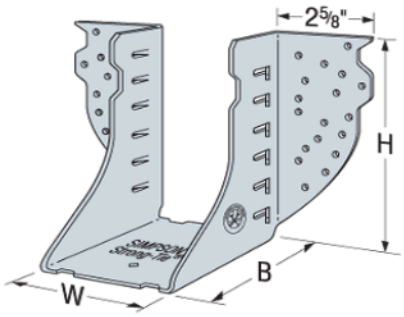

FIGURE 10—HGUS SERIES JOIST HANGER

TABLE 11A—DIMENSIONS, NAILING SCHEDULES AND DESIGN VALUES FOR HTU SERIES HANGERS
(1/2 Inch Maximum Gap between Supporting Member and Supported Member – Maximum Number of Nails into Supporting Member)

MODEL No.	DIMENSIONS[3] (inches)			FASTENERS[4] (Quantity-Type)		ALLOWABLE LOADS[5, 6, 7] (lbf)					
	W	H	B	Into Supporting Member	Into Supported Member	Uplift[8]	Download				
						C_D=1.6	C_D=0.9	C_D=1.0	C_D=1.15	C_D=1.25	C_D=1.6
Single 2X Sizes											
HTU26 (1/2" Gap – Min Nail)[1]	1 5/8	5 7/16	3 1/2	20-16d	11-10d x 1 1/2	635	2,395	2,395	2,395	2,395	2,395
	1 5/8	5 7/16	3 1/2	20-16d	14-10d x 1 1/2	1,175	2,640	2,940	3,100	3,100	3,100
HTU26 (1/2" Gap – Max Nail)[2]	1 5/8	5 7/16	3 1/2	20-16d	20-10d x 1 1/2	1,215	2,640	2,940	3,320	3,580	3,630
HTU28 (1/2" Gap – Min Nail)[1]	1 5/8	7 1/16	3 1/2	26-16d	14-10d x 1 1/2	1,110	3,430	3,770	3,770	3,770	3,770
HTU28 (1/2" Gap – Max Nail)[2]	1 5/8	7 1/16	3 1/2	26-16d	26-10d x 1 1/2	1,920	3,430	3,820	4,315	4,655	5,015
HTU210 (1/2" Gap – Min Nail)[1]	1 5/8	9 1/16	3 1/2	32-16d	14-10d x 1 1/2	1250	3,600	3,600	3,600	3,600	3,600
HTU210 (1/2" Gap – Max Nail)[2]	1 5/8	9 1/16	3 1/2	32-16d	32-10d x 1 1/2	3255	4,225	4,705	5,020	5,020	5,020
Double 2X Sizes											
HTU26-2 (1/2" Gap – Min Nail)[1]	3 5/16	5 7/16	3 1/2	20-16d	14-10d	1,515	2,640	2,940	3,320	3,500	3,500
HTU26-2 (1/2" Gap – Max Nail)[2]	3 5/16	5 7/16	3 1/2	20-16d	20-10d	1,910	2,640	2,940	3,320	3,500	3,500
HTU28-2 (1/2" Gap – Min Nail)[1]	3 5/16	7 1/16	3 1/2	26-16d	14-10d	1,490	3,430	3,820	3,980	3,980	3,980
HTU28-2 (1/2" Gap – Max Nail)[2]	3 5/16	7 1/16	3 1/2	26-16d	26-10d	3,035	3,430	3,820	4,315	4,655	5,520
HTU210-2 (1/2" Gap – Min Nail)[1]	3 5/16	9 1/16	3 1/2	32-16d	14-10d	1,755	4,225	4,255	4,255	4,255	4,255
HTU210-2 (1/2" Gap – Max Nail)[2]	3 5/16	9 1/16	3 1/2	32-16d	32-10d	3,855	4,225	4,705	5,310	5,730	6,470

For **SI:** 1 inch = 25.4 mm, 1 pound = 4.45 N.

[1]The suffix '(1/2" Gap – Min Nail)' corresponds to installed conditions where the gap between the supporting member and supported member is more than 1/8 inch (3.2 mm) and less than or equal to 1/2 inch (12.7 mm), and, at a minimum, the number of nails specified in the table above are installed into the supported wood truss. Refer to Figure 11B on page 19 for a typical installation detail.

[2]The suffix '(1/2" Gap – Max Nail)' corresponds to installed conditions where the gap between the supporting member and supported member is more than 1/8 inch (3.2 mm) and less than or equal to 1/2 inch (12.7 mm), and all of the pre-punched nail holes in the U-shaped portion of the hanger supporting the truss (joist) are filled with nails. This is designated in the table as "Max Nail" and is shown in Figure 11B.

[3]Refer to Figure 11A for definitions of hanger nomenclature (W, H, B).

[4]Allowable loads correspond to installations where the maximum possible number of nails is driven into the supporting member. Refer to Section 3.2.3 of this report for nail sizes and required minimum physical properties.

[5]Tabulated allowable loads are for installations in wood members complying with Section 3.2.2 of this report.

[6]Tabulated loads must be selected based on the applicable load duration factor, C_D, as permitted by the applicable building code. See Sections 4.1 and 4.2 for design and installation requirements.

[7]HTU series hangers provide torsional resistance, which is defined as a moment of not less than 75 pounds (334 N) times the depth of the joist at which the lateral movement of the top or bottom of the joist with respect to its vertical position is 0.125 inch (3.2 mm), for joists having a height no greater than the height (H) of the hanger.

[8]Allowable uplift loads have been increased for wind or earthquake loading with no further increase allowed. The tabulated allowable uplift loads must be reduced proportionally when other load durations govern.

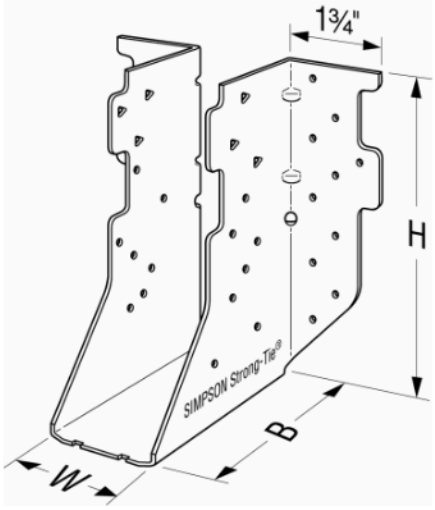

FIGURE 11A—HTU SERIES HANGER

TABLE 11B—DIMENSIONS, NAILING SCHEDULES AND DESIGN VALUES FOR HTU SERIES HANGERS
($^1/_8$ Inch Maximum Gap between Supporting Member and Supported Member – Maximum Number of Nails into Supporting Member)

MODEL No.	DIMENSIONS[3] (inches)			FASTENERS[4] (Quantity-Type)		ALLOWABLE LOADS[5, 6, 7] (lbf)					
	W	H	B	Into Supporting Member	Into Supported Member	Uplift[8]	Download				
						C_D=1.6	C_D=0.9	C_D=1.0	C_D=1.15	C_D=1.25	C_D=1.6
Single 2X Sizes											
HTU26 ($^1/_8$" Gap – Min Nail)[1]	$1^5/_8$	$5^7/_{16}$	$3^1/_2$	20-16d	11-10d x $1^1/_2$	640	2,640	2,670	2,670	2,670	2,670
	$1^5/_8$	$5^7/_{16}$	$3^1/_2$	20-16d	14-10d x $1^1/_2$	1,250	2,640	2,940	3,200	3,200	3,200
HTU26 ($^1/_8$" Gap – Max Nail)[2]	$1^5/_8$	$5^7/_{16}$	$3^1/_2$	20-16d	20-10d x $1^1/_2$	1,555	2,640	2,940	3,320	3,580	4,010
HTU28 ($^1/_8$" Gap – Min Nail)[1]	$1^5/_8$	$7^1/_{16}$	$3^1/_2$	26-16d	14-10d x $1^1/_2$	1,235	3,430	3,820	3,895	3,895	3,895
HTU28 ($^1/_8$" Gap – Max Nail)[2]	$1^5/_8$	$7^1/_{16}$	$3^1/_2$	26-16d	26-10d x $1^1/_2$	2,020	3,430	3,820	4,315	4,655	5,435
HTU210 ($^1/_8$" Gap – Min Nail)[1]	$1^5/_8$	$9^1/_{16}$	$3^1/_2$	32-16d	14-10d x $1^1/_2$	1,330	4,225	4,300	4,300	4,300	4,300
HTU210 ($^1/_8$" Gap – Max Nail)[2]	$1^5/_8$	$9^1/_{16}$	$3^1/_2$	32-16d	32-10d x $1^1/_2$	3,315	4,225	4,705	5,310	5,730	5,995
Double 2X Sizes											
HTU26-2 ($^1/_8$" Gap – Min Heel)[1]	$3^5/_{16}$	$5^7/_{16}$	$3^1/_2$	20-16d	14-10d	1,515	2,640	2,940	3,320	3,580	3,910
HTU26-2 ($^1/_8$" Gap – Max Nail)[2]	$3^5/_{16}$	$5^7/_{16}$	$3^1/_2$	20-16d	20-10d	2,175	2,640	2,940	3,320	3,580	4,480
HTU28-2 ($^1/_8$" Gap – Min Nail)[1]	$3^5/_{16}$	$7^1/_{16}$	$3^1/_2$	26-16d	14-10d	1,530	3,430	3,820	4,310	4,310	4,310
HTU28-2 ($^1/_8$" Gap – Max Nail)[2]	$3^5/_{16}$	$7^1/_{16}$	$3^1/_2$	26-16d	26-10d	3,485	3,430	3,820	4,315	4,655	5,825
HTU210-2 ($^1/_8$" Gap – Min Nail)[1]	$3^5/_{16}$	$9^1/_{16}$	$3^1/_2$	32-16d	14-10d	1,755	4,225	4,705	4,815	4,815	4,815
HTU210-2 ($^1/_8$" Gap – Max Nail)[2]	$3^5/_{16}$	$9^1/_{16}$	$3^1/_2$	32-16d	32-10d	4,110	4,225	4,705	5,310	5,730	6,515

For **SI:** 1 inch = 25.4 mm, 1 pound = 4.45 N.

[1]The suffix '($^1/_8$" Gap – Min Nail)' corresponds to installed conditions where the gap between the supporting member and supported wood truss is $^1/_8$ inch (3.2 mm) or less, and at a minimum, the number of nails specified in the table above are installed into the supported wood truss. Refer to Figure 11B for a typical installation detail.

[2]The suffix '($^1/_8$" Gap – Max Nail)' corresponds to installed conditions where the gap between the supporting member and supported wood truss is $^1/_8$ inch (3.2 mm) or less, and the all of the pre-punched nail holes in the U-shaped portion of the hanger supporting the truss (joist) are filled with nails. This is designated in the table as "Max Nail" and is shown in Figure 11B on this page.

[3]Refer to Figure 11A for definitions of hanger nomenclature (W, H, B).

[4]Allowable loads correspond to installations where the maximum possible number of nails is installed into the supporting member. Refer to Section 3.2.3 of this report for nail sizes and required minimum physical properties.

[5]Tabulated allowable loads are for installations in wood members complying with Section 3.2.2 of this report.

[6]Tabulated loads must be selected based on the applicable load duration factor, C_D, as permitted by the applicable building code. See Sections 4.1 and 4.2 for design and installation requirements.

[7]HTU series hangers provide torsional resistance, which is defined as a moment of not less than 75 pounds (334 N) times the depth of the joist at which the lateral movement of the top or bottom of the joist with respect to its vertical position is 0.125 inch (3.2 mm), for joists having a height no greater than the height (H) of the hanger.

[8]Allowable uplift loads have been increased for wind or earthquake loading with no further increase allowed. The tabulated allowable uplift loads must be reduced proportionally when other load durations govern.

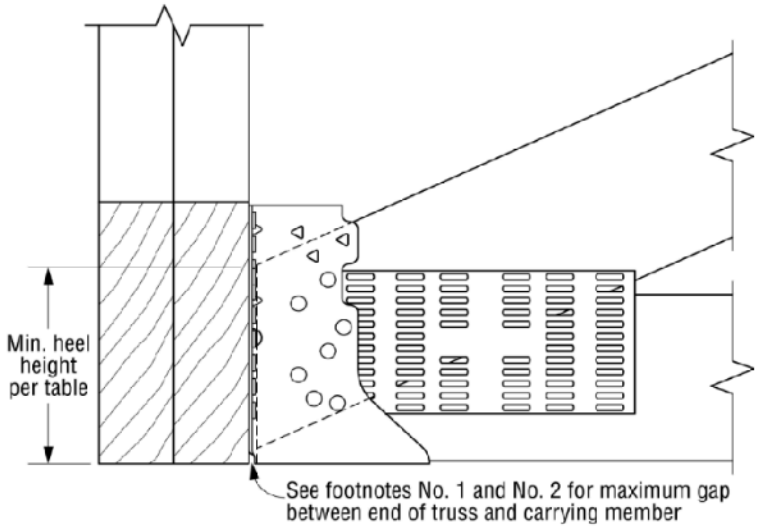

FIGURE 11B—TYPICAL HTU INSTALLATION

TABLE 11C—DIMENSIONS, NAILING SCHEDULES AND DESIGN VALUES FOR HTU SERIES HANGERS – ALTERNATE INSTALLATION
($^1/_2$ Inch Maximum Gap between Supporting Member and Supported Member - Minimum Number of Nails into Supporting Member)

MODEL No. [1, 2]	DIMENSIONS [3] (inches)			FASTENERS [4] (Quantity-Type)		ALLOWABLE LOADS [5, 6, 7] (lbf)					
						Uplift [8]	Download				
	W	H	B	Into Supporting Member	Into Supported Member	C_D=1.6	C_D=0.9	C_D=1.0	C_D=1.15	C_D=1.25	C_D=1.6
HTU26 ($^1/_2$" Gap – Min Nail)[1]	$1^5/_8$	$5^7/_{16}$	$3^1/_2$	10-16d	14-10d x $1^1/_2$	845	1,320	1,470	1,660	1,790	1,875
HTU26 ($^1/_2$" Gap – Max Nail)[2]	$1^5/_8$	$5^7/_{16}$	$3^1/_2$	10-16d	20-10d x $1^1/_2$	1,240	1,320	1,470	1,660	1,790	2,220
HTU28 ($^1/_2$" Gap – Max Nail)[2]	$1^5/_8$	$7^1/_{16}$	$3^1/_2$	20-16d	26-10d x $1^1/_2$	1,920	2,640	2,940	3,320	3,580	3,905
HTU210 ($^1/_2$" Gap – Max Nail)[2]	$1^5/_8$	$9^1/_{16}$	$3^1/_2$	20-16d	32-10d x $1^1/_2$	2,880	2,640	2,940	3,320	3,580	3,905

For **SI:** 1 inch = 25.4 mm, 1 pound = 4.45 N.

[1]The suffix '($^1/_2$" Gap – Min Nail)' corresponds to installed conditions where the gap between the supporting member and supported member is more than $^1/_8$ inch (3.2 mm) and less than or equal to $^1/_2$ inch (12.7 mm), and at a minimum, the number of nails specified in the table above are installed into the supported wood truss. Refer to Figure 11C for an alternate installation detail.
[2]The suffix '($^1/_2$" Gap – Max Nail)' corresponds to installed conditions where the gap between the supporting member and supported member is more than $^1/_8$ inch (3.2 mm) and less than or equal to $^1/_2$ inch (12.7 mm), and the all of the pre-punched nail holes in the U-shaped portion of the hanger supporting the truss (joist) are filled with nails. This is designated in the table as "Max Nail" and is shown in Figure 11A.
[3]Refer to Figure 11A for definitions of hanger nomenclature (W, H, B).
[4]Allowable loads correspond to installations where the minimum allowable number of nails is installed into the supporting member. Refer to Section 3.2.3 of this report for nail sizes and required minimum physical properties.
[5]Tabulated allowable loads are for installations in wood members complying with Section 3.2.2 of this report.
[6]Tabulated loads must be selected based on the applicable load duration factor, C_D, as permitted by the applicable building code. See Sections 4.1 and 4.2 for design and installation requirements.
[7]HTU series hangers provide torsional resistance, which is defined as a moment of not less than 75 pounds (334 N) times the depth of the joist at which the lateral movement of the top or bottom of the joist with respect to its vertical position is 0.125 inch (3.2 mm), for joists having a height no greater than the height (H) of the hanger.
[8]Allowable uplift loads have been increased for wind or earthquake loading with no further increase allowed. The tabulated allowable uplift loads must be reduced proportionally when other load durations govern.

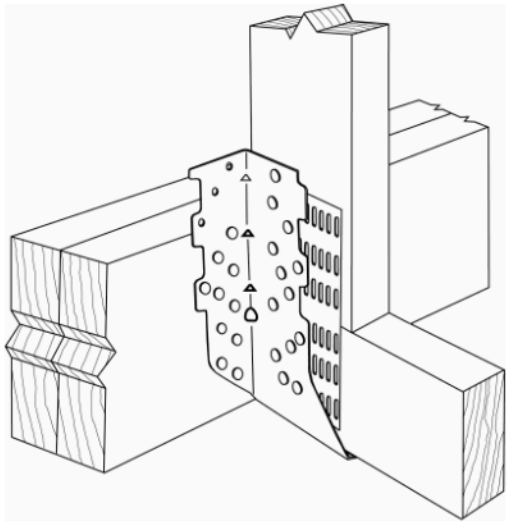

FIGURE 11C—ALTERNATE HTU INSTALLATION

TABLE 12—ALLOWABLE LOADS FOR THE LGU, MGU, HGU AND HHGU SERIES HANGERS

MODEL No.	DIMENSIONS[1] (inches)					FASTENERS (Quantity-Type)		ALLOWABLE LOADS[2,6,7] (lbf)			
								Uplift[5]	Download		
	W	H[4] (min)	B	h_a[3]	a	Header	Joist	C_D=1.6	C_D=1.0	C_D=1.15	C_D=1.25
LGU3.25-SDS	3 1/4	8	4 1/2	7 3/8	3 1/4	16 SDS 1/4" x 2 1/2"	12 SDS 1/4" x 2 1/2"	5,555	6,720	7,310	7,310
LGU3.63-SDS	3 5/8										
LGU5.25-SDS	5 1/4										
MGU3.63-SDS	3 5/8	9 1/4	4 1/2	8 5/8	4	24 SDS 1/4" x 2 1/2"	16 SDS 1/4" x 2 1/2"	7,260	9,450	9,450	9,450
MGU5.25-SDS	5 1/4										
MGU5.50-SDS	5 1/2										
MGU5.62-SDS	5 5/8										
MGU7.00-SDS	7										
HGU3.63-SDS	3 5/8	11	5 1/4	10 3/8	4 3/4	36 SDS 1/4" x 2 1/2"	24 SDS 1/4" x 2 1/2"	9.460	13,160	13,160	13,160
HGU5.25-SDS	5 1/4										
HGU5.50-SDS	5 1/2										
HGU5.62-SDS	5 5/8										
HGU7.00-SDS	7										
HGU7.25-SDS	7 1/4										
HGU9.00-SDS	9										
HHGU5.25-SDS	5 1/4	13	5 1/4	12 3/8	4 3/4	44 SDS 1/4" x 2 1/2"	28 SDS 1/4" x 2 1/2"	9,700	18,480	20,455	20,455
HHGU5.50-SDS	5 1/2										
HHGU5.62-SDS	5 5/8										
HHGU7.00-SDS	7							14,550	18,480	20,455	20,445
HHGU7.25-SDS	7 1/4										
HHGU9.00-SDS	9										

For **SI:** 1 inch = 25.4 mm, 1 lbf = 4.45 N.

[1]Refer to Figure 12 (this page) for definitions of hanger nomenclature (W, H, B, h_a and a).
[2]Tabulated allowable loads must be selected based on duration of load as permitted by the applicable building code.
[3]The supporting member (header) height must be at least at high as the flange height, h_a.
[4]The H dimension must be specified. The maximum H dimension is 30 inches.
[5]The uplift loads have been increased for wind or earthquake loading with no further increase allowed. The allowable uplift loads must be reduced when other load durations govern.
[6]The allowable loads are based on the use of an engineered wood joist member with an allowable $F_{c\perp}$ of 650 psi. When use is to support members having an $F_{c\perp}$ of less than 650 psi, it must be verified that the combination of bearing capacity and joist nail capacity is adequate.
[7]For supported members other than glulam beams, lateral support must be provided at the ends in accordance with Section 2308.8.6 of the 2024 IBC (Section 2308.4.6 of the 2021, 2018, 2015 and 2012 IBC) or Section R502.7 of the IRC.

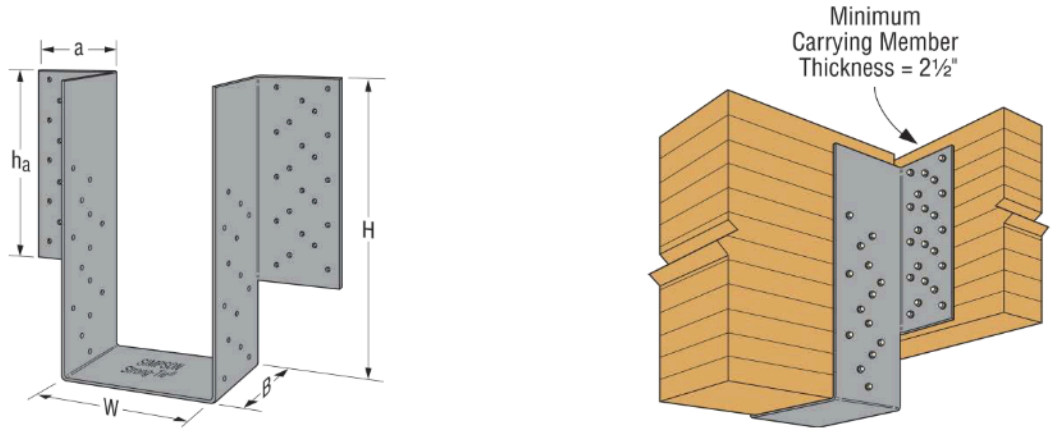

FIGURE 12—DIMENSIONS AND TYPICAL INSTALLATION OF THE LGU, MGU, HGU AND HHGU SERIES HANGERS

TABLE 13—ALLOWABLE LOADS FOR THE SUR/SUL SERIES JOIST HANGERS

MODEL NO.	DIMENSIONS[1] (inches)					FASTENERS (Quantity-Type)		ALLOWABLE LOADS[2,6,7] (lbf)			
								Uplift[5]	Download		
	W	H	B	A_1	A_2	Header	Joist	C_D=1.6	C_D=1.0	C_D=1.15	C_D=1.25
SUR/L24	1 9/16	3 1/16	2	1 1/8	1 1/4	4-16d	4-10d x 1 1/2	395	575	650	705
SUR/L26	1 9/16	5	2	1 1/8	1 5/16	6-16d	6-10d x 1 1/2	675	865	980	1,055
SUR/L210	1 9/16	8	2	1 1/8	1 5/16	10-16d	10-10d x 1 1/2	1,445	1,440	1,635	1,760
SUR/L214	1 9/16	10	2	1 1/8	1 5/16	12-16d	12-10d x 1 1/2	1,890	1,730	1,960	2,115
SUR/L1.81/9	1 13/16	9	3	1 5/8	2 5/16	12-16d	2-10d x 1 1/2	210[3,4]	1,730	1,955	1,955
SUR/L1.81/11	1 13/16	11	3	1 5/8	2 5/16	16-16d	2-10d x 1 1/2	210[3,4]	2,300	2,560	2,560
SUR/L1.81/14	1 13/16	13 3/4	3	1 5/8	2 5/16	20-16d	2-10d x 1 1/2	210[3,4]	2,560	2,560	2,560
SUR/L2.06/9	2 1/16	9 1/16	3 3/16	1 5/8	2 1/8	14-16d	2-10d x 1 1/2	210[3]	2,015	2,285	2,465
SUR/L2.06/11	2 1/16	11 1/4	3 3/16	1 5/8	2 1/8	16-16d	2-10d x 1 1/2	210[3]	2,300	2,610	2,665
SUR/L2.06/14	2 1/16	13 5/8	3 3/16	1 5/8	2 1/8	18-16d	2-10d x 1 1/2	210[3]	2,590	2,665	2,665
SUR/L2.1/9	2 1/8	9 1/16	3 3/16	1 9/16	2 1/8	14-16d	2-10d x 1 1/2	210[3]	2,015	2,285	2,465
SUR/L2.1/11	2 1/8	11 3/16	3 3/16	1 9/16	2 1/8	16-16d	2-10d x 1 1/2	210[3]	2,300	2,610	2,665
SUR/L2.1/14	2 1/8	13 9/16	3 3/16	1 9/16	2 1/8	18-16d	2-10d x 1 1/2	210[3]	2,590	2,665	2,665
SUR/L2.37/9	2 3/8	8 15/16	3 3/16	1 5/16	2 1/8	14-16d	2-10d x 1 1/2	210[3]	2,015	2,285	2,465
SUR/L2.37/11	2 3/8	11 3/16	3 3/16	1 5/16	2 1/8	16-16d	2-10d x 1 1/2	210[3]	2,300	2,610	2,665
SUR/L2.37/14	2 3/8	13 7/16	3 3/16	1 5/16	2 1/8	18-16d	2-10d x 1 1/2	210[3]	2,590	2,665	2,665
SUR/L2.56/9	2 9/16	8 13/16	3 3/16	1 1/8	2 1/8	14-16d	2-10d x 1 1/2	210[3]	2,015	2,285	2,465
SUR/L2.56/11	2 9/16	11 3/16	3 3/16	1 1/8	2 1/8	16-16d	2-10d x 1 1/2	210[3]	2,300	2,615	2,665
SUR/L2.56/14	2 9/16	13 5/16	3 3/16	1 1/8	2 1/8	18-16d	2-10d x 1 1/2	210[3]	2,590	2,665	2,665
SUR/L26-2	3 1/8	4 15/16	2 5/8	1 1/2	2 3/8	8-16d	4-16d x 2 1/2	725	1.150	1,305	1,325
SUR/L210-2	3 1/8	8 11/16	2 5/8	1 7/16	2 3/8	14-16d	6-16d x 2 1/2	1,160	2,015	2,285	2,345
SUR/L214-2	3 1/8	12 11/16	2 7/16	1 7/16	2 3/8	18-16d	8-16d x 2 1/2	1,505	2,345	2,345	2,345
SUR/L46	3 9/16	4 3/4	2 5/8	1	2 3/8	8-16d	4-16d	730	1,150	1,305	1,325
SUR/L410	3 9/16	8 1/2	2 5/8	1	2 3/8	14-16d	6-16d	1,160	2,015	2,285	2,345
SUR/L414	3 9/16	12 1/2	2 5/8	1	2 3/8	18-16d	8-16d	1,490	2,345	2,345	2,345

For **SI:** 1 inch = 25.4 mm, 1 lbf = 4.45 N.

[1]Refer to Figure 13A (this page) for definitions of hanger nomenclature (W, H, B, A1, A2).
[2]Tabulated allowable loads must be selected based on duration of load as permitted by the applicable building code.
[3]Optional triangle holes may be filled (requires web stiffeners for I-joist) for additional uplift resistance. When a total of six 10d x 1 1/2-inch-long nails are installed into the joist for 9- and 11-inch models, an uplift value of 825 lbf may be used. When a total of eight 10dx1 1/2" nails are installed into the joist for 14-inch models, an uplift value of 1,190 lbf may be used.
[4]Uplift value based on use of solid sawn lumber or LVL joist member. When using an I-joist as the joist member, allowable uplift must be taken as 140 lbf.
[5]The uplift loads have been increased for wind or earthquake loading with no further increase allowed. The allowable uplift loads must be reduced when other load durations govern.
[6]SUR/L series hangers provide torsional resistance, which is defined as a moment of not less than 75 pounds (334 N) times the depth of the joist at which the lateral movement of the top or bottom of the joist with respect to its vertical position is 0.125 inch (3.2 mm). The height (H) of the hanger must be at least 60 percent of the height of the joist unless additional lateral restraint is provided, as designed by others.
[7]The 2-2x and a 4x SUR/L models are available with the A2 flanges concealed and are specified with the model designation SUR/LC

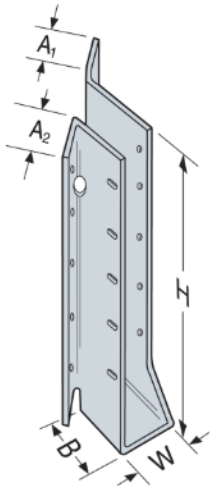

FIGURE 13A—SUL SERIES JOIST HANGER

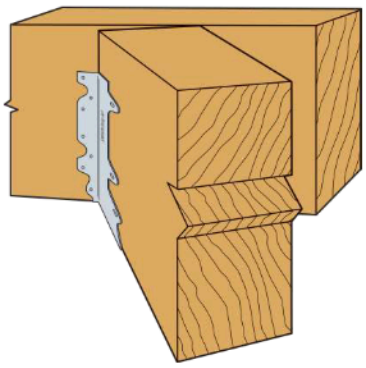

FIGURE 13B—TYPICAL SUR HANGER INSTALLATION

TABLE 14—ALLOWABLE LOADS FOR THE HSUR/HSUL SERIES JOIST HANGERS

MODEL NO.	DIMENSIONS[1] (inches)					FASTENERS (Quantity-Type)		ALLOWABLE LOADS[2,3,6,7] (lbf)			
	W	H	B	A_1	A_2	Header	Joist	Uplift[5]	Download		
								$C_D = 1.6$	$C_D = 1.0$	$C_D = 1.15$	$C_D = 1.25$
HSUR/L26-2	$3^1/_8$	$4^{15}/_{16}$	$2^7/_{16}$	$1^3/_4$	$2^3/_8$	12-16d	4-16d x $2^1/_2$	725	1,785	1,795	1,795
HSUR/L210-2	$3^1/_8$	$8^{11}/_{16}$	$2^7/_{16}$	$1^3/_4$	$2^3/_8$	20-16d	6-16d x $2^1/_2$	1,160	2,975	3,355	3,410
HSUR/L214-2	$3^1/_8$	$12^{11}/_{16}$	$2^7/_{16}$	$1^3/_4$	$2^3/_8$	26-16d	8-16d x $2^1/_2$	1,490	3,865	4,360	4,685
HSUR/L46	$3^9/_{16}$	$4^3/_4$	$2^7/_{16}$	1	$2^3/_{16}$	12-16d	4-16d	725	1,785	1,795	1,795
HSUR/L410	$3^9/_{16}$	$8^1/_2$	$2^7/_{16}$	1	$2^3/_{16}$	20-16d	6-16d	1,150	2,975	3,355	3,410
HSUR/L414	$3^9/_{16}$	$12^1/_2$	$2^7/_{16}$	1	$2^3/_{16}$	26-16d	8-16d	1,490	3,865	4,360	4.685
HSUR/L4.12/9	$4^1/_8$	9	3	$1^7/_{16}$	$2^3/_8$	12-16d	2-10d x $1^1/_2$	145[4]	1,725	1,725	1,725
HSUR/L4.12/11	$4^1/_8$	$11^1/_8$	3	$1^7/_{16}$	$2^3/_8$	16-16d	2-10d x $1^1/_2$	145[4]	2,380	2,685	2,885
HSUR/L4.12/14	$4^1/_8$	$13^3/_4$	3	$1^7/_{16}$	$2^3/_8$	20-16d	2-10d x $1^1/_2$	145[4]	2,975	3,330	3,330
HSUR/L4.12/16	$4^1/_8$	$15^3/_4$	3	$1^7/_{16}$	$2^3/_8$	24-16d	2-10d x $1^1/_2$	145[4]	3,330	3,330	3,330
HSUR/L4.28/9	$4^5/_{16}$	9	3	$1^7/_{16}$	$2^3/_8$	12-16d	2-10d x $1^1/_2$	145[4]	1,7255	1,725	1,725
HSUR/L4.28/11	$4^5/_{16}$	$11^1/_8$	3	$1^7/_{16}$	$2^3/_8$	16-16d	2-10d x $1^1/_2$	145[4]	2,380	2,685	2,885
HSUR/L4.75/9	$4^3/_4$	$8^{15}/_{16}$	$2^3/_4$	$1^7/_{16}$	$2^3/_8$	12-16d	2-10d x $1^1/_2$	145[4]	1,725	1,725	1,725
HSUR/L4.75/11	$4^3/_4$	$10^{15}/_{16}$	$2^3/_4$	$1^7/_{16}$	$2^3/_8$	16-16d	2-10d x $1^1/_2$	145[4]	2,380	2,685	2,885
HSUR/L4.75/14	$4^3/_4$	$13^3/_4$	$2^3/_4$	$1^7/_{16}$	$2^3/_8$	20-16d	2-10d x $1^1/_2$	145[4]	2,975	3,330	3,330
HSUR/L4.75/16	$4^3/_4$	$15^3/_4$	$2^3/_4$	$1^7/_{16}$	$2^3/_8$	24-16d	2-10d x $1^1/_2$	145[4]	3,330	3,330	3,330
HSUR/L5.12/9	$5^1/_8$	9	$2^{13}/_{16}$	$1^7/_{16}$	$2^3/_8$	12-16d	2-10d x $1^1/_2$	145[4]	1,725	1,725	1,725
HSUR/L5.12/11	$5^1/_8$	11	$2^{13}/_{16}$	$1^7/_{16}$	$2^3/_8$	16-16d	2-10d x $1^1/_2$	145[4]	2,380	2,685	2,885
HSUR/L5.12/14	$5^1/_8$	$13^3/_4$	$2^{13}/_{16}$	$1^7/_{16}$	$2^3/_8$	20-16d	2-10d x $1^1/_2$	145[4]	2,975	3,330	3,330
HSUR/L5.12/16	$5^1/_8$	$15^3/_4$	$2^{13}/_{16}$	$1^7/_{16}$	$2^3/_8$	24-16d	2-10d x $1^1/_2$	145[4]	3,330	3,330	3,330

For **SI:** 1 inch = 25.4 mm, 1 lbf = 4.45 N.

[1]Refer to Figure 14A (this page) for definitions of hanger nomenclature (W, H, B, A1, A2).
[2]Tabulated allowable loads must be selected based on duration of load as permitted by the applicable building code.
[3]When I-joists are the supported member as shown in Figure 14B, each I-joist must have web stiffeners installed in accordance with the I-joist manufacturer's evaluation report, and the minimum required quantity and type of nails, as specified in the column entitled FASTENERS must be nailed directly into the web stiffeners and/or I-joist.
[4]Optional triangular holes may be filled (requires web stiffeners) for additional uplift. When a total of six 10d x $1^1/_2$-inch-long nails are installed into the joist, an uplift value of 505 lbf may be used.
[5]The uplift loads have been increased for wind or earthquake loading with no further increase allowed. The allowable uplift loads must be reduced when other load durations govern.
[6]HSUR/L series hangers provide torsional resistance, which is defined as a moment of not less than 75 pounds (334 N) times the depth of the joist at which the lateral movement of the top or bottom of the joist with respect to its vertical position is 0.125 inch (3.2 mm). The height (H) of the hanger must be at least 60 percent of the height of the joist unless additional lateral restraint is provided, as designed by others.
[7]The 2-2x and a 4x HSUR/L models are available with the A2 flanges concealed and are specified with the model designation HSUR/LC

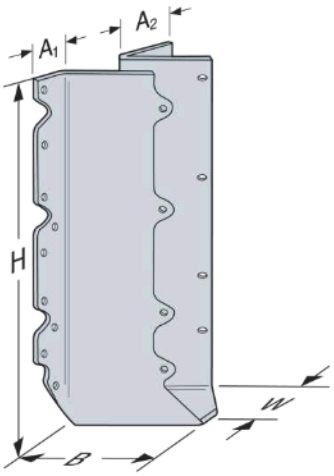

FIGURE 14A—HSUR JOIST HANGER

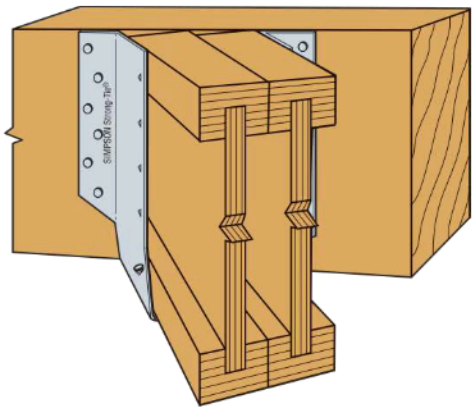

FIGURE 14B—TYPICAL HSUR JOIST HANGER INSTALLATION (Web Stiffeners not shown for Clarity–See Footnote 3 to Table 14)

TABLE 15A—APPLICABLE MODEL NUMBERS FOR THE IUS SERIES I-JOIST HANGERS[1]

MODEL NO.	DIMENSIONS[2] (Inches)			FASTENERS (Quantity-Type)	
	W	H	B	Header	Joist
IUS1.81/9.5	$1^7/_8$	$9^1/_2$	2	8-10d	—
IUS1.81/11.88		$11^7/_8$		10-10d	—
IUS1.81/14(min)		14		12-10d	—
IUS1.81/14(max)				14-10d	—
IUS1.81/16(min)		16		14-10d	—
IUS1.81/16(max)				16-10d	—
IUS2.06/9.5	$2^1/_8$	$9^1/_2$	2	8-10d	—
IUS2.06/11.88		$11^7/_8$		10-10d	—
IUS2.06/14(min)		14		12-10d	—
IUS2.06/14(max)				14-10d	—
IUS2.06/16(min)		16		14-10d	—
IUS2.06/16(max)				16-10d	—
IUS2.37/9.5	$2^7/_{16}$	$9^1/_2$	2	8-10d	—
IUS2.37/11.88		$11^7/_8$		10-10d	—
IUS2.37/14(min)		14		12-10d	—
IUS2.37/14(max)				14-10d	—
IUS2.37/16(min)		16		14-10d	—
IUS2.37/16(max)				16-10d	—

MODEL NO.	DIMENSIONS[2] (Inches)			FASTENERS (Quantity-Type)	
	W	H	B	Header	Joist
IUS2.56/9.25	$2^5/_8$	$9^1/_4$	2	8-10d	—
IUS2.56/9.5		$9^1/_2$		8-10d	—
IUS2.56/11.88		$11^7/_8$		10-10d	—
IUS2.56/14(min)		14		12-10d	—
IUS2.56/14(max)				14-10d	—
IUS2.56/16(min)		16		14-10d	—
IUS2.56/16(max)				16-10d	—
IUS3.56/9.5	$3^5/_8$	$9^1/_2$	2	10-10d	—
IUS3.56/11.88		$11^7/_8$		12-10d	—
IUS3.56/14(min)		14		12-10d	—
IUS3.56/14(max)				14-10d	—
IUS3.56/16(min)		16		14-10d	—
IUS3.56/16(max)				16-10d	—
(This section of the table is intentionally blank)					

For **SI:** 1 inch = 25.4 mm.

[1]Model numbers ending with (min) refer to nails installed into only round holes of the hanger, and the model numbers ending with (max) refer to nails installed into both round and triangle holes of the hanger.
[2]Refer to Figures 15A and 15B (next page) for definitions of hanger nomenclature (W, H, B).

TABLE 15B—ALLOWABLE LOADS FOR THE IUS SERIES I-JOIST HANGERS

MODEL NO.	DIMENSIONS[1] (inches)			COMMON NAILS (Quantity-Size)		ALLOWABLE LOADS[2,5] (lbf)			
						Uplift [3,4]	Download		
	W	H	B	Header	Joist	$C_D = 1.6$	$C_D = 1.0$	$C_D = 1.15$	$C_D = 1.25$
IUS	$1^7/_8$ to $2^5/_8$	$9^1/_4$ to 16	2	8-10d	—	70	950	1,080	1,165
				10-10d	—	70	1,185	1,345	1,455
				12-10d	—	70	1,420	1,615	1,745
				14-10d	—	70	1,660	1,805	1,805
				16-10d	—	70	1,805	1,805	1,805
IUS	$2^{11}/_{16}$ to $3^5/_8$	$9^1/_2$ to 16	2	10-10d	—	70	1,185	1,345	1,455
				12-10d	—	70	1,420	1,615	1,745
				14-10d	—	70	1,660	1,805	1,805
				16-10d	—	70	1,805	1,805	1,805

For **SI:** 1 inch = 25.4 mm, 1 pound = 4.45 N.

[1] Refer to Figures 15A and 15B (next page) for definitions of hanger nomenclature (W, H, B).
[2] Tabulated allowable loads must be selected based on duration of load as permitted by the applicable building code.
[3] The uplift loads have been increased for wind or earthquake loading with no further increase allowed. The allowable uplift loads need not be reduced when other load durations govern.
[4] Additional uplift capacity is available when installing 2-10d x $1^1/_2$-inch-long nails through the triangular holes that are pre-punched in the U-shaped portion of the hanger and into the stiffened web of the prefabricated wood I-joist. When these additional nails are used, the maximum allowable uplift load is 345 lbf (C_D = 1.6).
[5] The allowable loads are based on the use of prefabricated wood I-joists having flanges with an allowable compression perpendicular-to-grain, $F_{c\perp}$, of 750 psi. When use is to support wood I-joists with flanges having an $F_{c\perp}$ of less than 750 psi, it must be verified that the combination of bearing capacity and joist nail capacity is adequate.

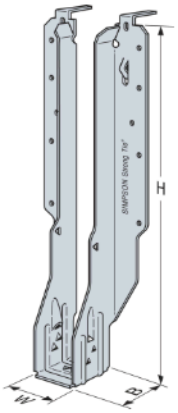

FIGURE 15A
TYPICAL IUS HANGER
(SEAT STYLE A)

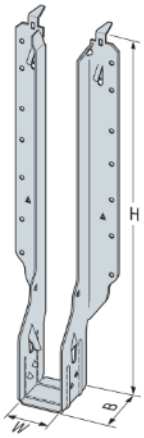

FIGURE 15B
TYPICAL IUS HANGER
(SEAT STYLE B)

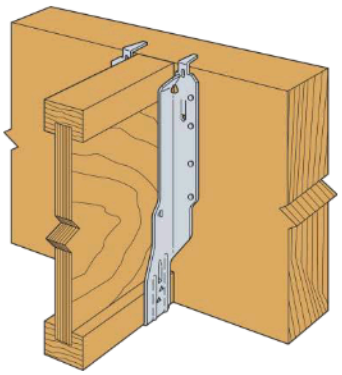

FIGURE 15C—TYPICAL IUS HANGER INSTALLATION
(Supported Wood I-joist without Web Stiffeners)

TABLE 16—ALLOWABLE LOADS FOR THE MIU SERIES JOIST HANGERS

MODEL NO.	DIMENSIONS[1] (in.)			FASTENERS[4]		ALLOWABLE LOADS (lbf)[2,5,6,7]			
						Uplift[3,4,5]	Download		
	W	H	B	Header	Joist	$C_D = 1.6$	$C_D = 1.0$	$C_D = 1.15$	$C_D = 1.25$
MIU1.56/7	$1^{9}/_{16}$	$6^{15}/_{16}$	$2^{1}/_{2}$	10-16d	4-10d x $1^{1}/_{2}$	555	1,440	1,635	1,760
MIU1.56/9		$8^{15}/_{16}$		16-16d	6-10d x $1^{1}/_{2}$	965	2,305	2,615	2,820
MIU1.56/11		$11^{1}/_{16}$		20-16d	6-10d x $1^{1}/_{2}$	965	2,880	3,135	3,135
MIU1.56/14		$13^{7}/_{16}$		22-16d	6-10d x $1^{1}/_{2}$	965	3,170	3,550	3,610
MIU1.81/7	$1^{13}/_{16}$	$6^{15}/_{16}$	$2^{1}/_{2}$	10-16d	4-10d x $1^{1}/_{2}$	555	1,440	1,635	1,760
MIU1.81/9		$8^{13}/_{16}$		16-16d	6-10d x $1^{1}/_{2}$	965	2,305	2,615	2,820
MIU1.81/11		$11^{1}/_{16}$		20-16d	6-10d x $1^{1}/_{2}$	965	2,880	3,135	3,135
MIU1.81/14		$13^{5}/_{16}$		22-16d	6-10d x $1^{1}/_{2}$	965	3,170	3,595	3,875
MIU1.81/16		$15^{5}/_{16}$		24-16d	6-10d x $1^{1}/_{2}$	965	3,455	3,902	4,045
MIU1.81/18		$17\ ^{5}/_{16}$		26-16d	6-10d x $1^{1}/_{2}$	965	3,745	4,020	4,045
MIU2.1/11	$2^{1}/_{8}$	$11^{1}/_{16}$	$2^{1}/_{2}$	20-16d	6-10d x $1^{1}/_{2}$	965	2,880	3,135	3,135
MIU2.37/7	$2^{3}/_{8}$	$6^{15}/_{16}$	$2^{1}/_{2}$	10-16d	4-10d x $1^{1}/_{2}$	555	1,440	1,635	1,760
MIU2.37/9		9		16-16d	6-10d x $1^{1}/_{2}$	965	2,305	2,615	2,820
MIU2.37/11		$11^{1}/_{16}$		20-16d	6-10d x $1^{1}/_{2}$	965	2,880	3,135	3,135
MIU2.37/14		$13^{1}/_{2}$		22-16d	6-10d x $1^{1}/_{2}$	965	3,170	3,595	3,875
MIU2.37/16		$15^{1}/_{2}$		24-16d	6-10d x $1^{1}/_{2}$	965	3,455	3,920	4,045
MIU2.37/18		$17^{1}/_{2}$		26-16d	6-10d x $1^{1}/_{2}$	965	3,745	4,045	4,045
MIU2.37/20		$19^{1}/_{2}$		28-16d	6-10d x $1^{1}/_{2}$	965	4,030	4,060	4,060
MIU2.56/9	$2^{9}/_{16}$	$8^{15}/_{16}$	$2^{1}/_{2}$	16-16d	6-10d x $1^{1}/_{2}$	965	2,305	2,615	2,820
MIU2.56/11		$11^{1}/_{16}$		20-16d	6-10d x $1^{1}/_{2}$	965	2,880	3,135	3,135
MIU2.56/13		$12^{1}/_{4}$		20-16d	6-10d x $1^{1}/_{2}$	965	2,880	3,135	3,135
MIU2.56/14		$13^{7}/_{16}$		22-16d	6-10d x $1^{1}/_{2}$	965	3,170	3,595	3,875
MIU2.56/16		$15^{7}/_{16}$		24-16d	6-10d x $1^{1}/_{2}$	965	3,455	3,920	4,045
MIU2.56/18		$17^{7}/_{16}$		26-16d	6-10d x $1^{1}/_{2}$	965	3,745	4,045	4,045
MIU2.56/20		$19^{7}/_{16}$		28-16d	6-10d x $1^{1}/_{2}$	965	4,030	4,060	4,060
MIU3.12/9	$3^{1}/_{8}$	$9^{1}/_{16}$	$2^{1}/_{2}$	16-16d	6-10d x $1^{1}/_{2}$	965	2,305	2,615	2,820
MIU3.12/11		$11^{1}/_{8}$		20-16d	6-10d x $1^{1}/_{2}$	965	2,880	3,135	3,135
MIU3.56/9	$3^{9}/_{16}$	$8^{13}/_{16}$	$2^{1}/_{2}$	16-16d	6-10d x $1^{1}/_{2}$	965	2,305	2,615	2,820
MIU3.56/11		$11^{1}/_{8}$		20-16d	6-10d x $1^{1}/_{2}$	965	2,880	3,135	3,135
MIU3.56/14		$13^{5}/_{16}$		22-16d	6-10d x $1^{1}/_{2}$	965	3,170	3,595	3,875
MIU3.56/16		$15^{5}/_{16}$		24-16d	6-10d x $1^{1}/_{2}$	965	3,455	3,920	4,045
MIU3.56/18		$17^{5}/_{16}$		26-16d	6-10d x $1^{1}/_{2}$	965	3,745	4,045	4,045
MIU3.56/20		$19^{5}/_{16}$		28-16d	6-10d x $1^{1}/_{2}$	965	4,030	4,060	4,060

Please refer to next page for continuation of Table 16.

TABLE 16—ALLOWABLE LOADS FOR THE MIU SERIES JOIST HANGERS (Continued)

MODEL NO.	DIMENSIONS[1] (in.)			FASTENERS[4]		ALLOWABLE LOADS (lbf)[2,5,6,7]			
						Uplift[3,4,5]	Download		
	W	H	B	Header	Joist	C_D = 1.6	C_D = 1.0	C_D = 1.15	C_D = 1.25
MIU4.12/9	$4^1/_8$	$9^1/_{16}$	$2^1/_2$	16-16d	6-10d x $1^1/_2$	965	2,305	2,615	2,820
MIU4.12/11		$11^1/_8$		20-16d	6-10d x $1^1/_2$	965	2,880	3,135	3,135
MIU4.12/14		$13^9/_{16}$		22-16d	6-10d x $1^1/_2$	965	3,170	3,595	3,875
MIU4.12/16		$15^9/_{16}$		24-16d	6-10d x $1^1/_2$	965	3,455	3,920	4,045
MIU4.28/9	$4^5/_{16}$	9	$2^1/_2$	16-16d	6-10d x $1^1/_2$	965	2,305	2,615	2,820
MIU4.28/11		$11^1/_8$		20-16d	6-10d x $1^1/_2$	965	2,880	3,135	3,135
MIU4.28/14		$13^1/_2$		22-16d	6-10d x $1^1/_2$	965	3,170	3,595	3,875
MIU4.28/16		$15^1/_2$		24-16d	6-10d x $1^1/_2$	965	3,455	3,920	4,045
MIU4.75/9	$4^3/_4$	9	$2^1/_2$	16-16d	6-10d x $1^1/_2$	965	2,305	2,615	2,820
MIU4.75/11		$11^1/_{16}$		20-16d	6-10d x $1^1/_2$	965	2,880	3,135	3,135
MIU4.75/14		$13^1/_2$		22-16d	6-10d x $1^1/_2$	965	3,170	3,595	3,875
MIU4.75/16		$15^1/_2$		24-16d	6-10d x $1^1/_2$	965	3,455	3,920	4,045
MIU4.75/18		$17^1/_2$		26-16d	6-10d x $1^1/_2$	965	3,745	4,045	4,045
MIU4.75/20		$19^1/_2$		28-16d	6-10d x $1^1/_2$	965	4,030	4,060	4,060
MIU5.12/7	$5^1/_8$	$6^{15}/_{16}$	$2^1/_2$	10-16d	4-10d x $1^1/_2$	555	1,440	1,635	1,760
MIU5.12/9		$8^{13}/_{16}$		16-16d	6-10d x $1^1/_2$	965	2,305	2,615	2,820
MIU5.12/11		$11^1/_8$		20-16d	6-10d x $1^1/_2$	965	2,880	3,135	3,135
MIU5.12/14		$13^5/_{16}$		22-16d	6-10d x $1^1/_2$	965	3,170	3,595	3,875
MIU5.12/16		$15^5/_{16}$		24-16d	6-10d x $1^1/_2$	965	3,455	3,920	4,045
MIU5.12/18		$17^5/_{16}$		26-16d	6-10d x $1^1/_2$	965	3,745	4,045	4,045
MIU5.12/20		$19^5/_{16}$		28-16d	6-10d x $1^1/_2$	965	4,030	4,060	4,060

For **SI:** 1 inch = 25.4 mm, 1 lbf = 4.45 N.

[1] Refer to Figure 16A (this page) for definitions of hanger nomenclature (W, H and B).
[2] Tabulated allowable loads must be selected based on duration of load as permitted by the applicable building code.
[3] The uplift loads have been increased for wind or earthquake loading with no further increase allowed. The allowable uplift loads must be reduced when other load durations govern.
[4] Total number of joist nails specified in the table must be installed to resist tabulated uplift loads. The bottom two 10d x $1^1/_2$-inch-long nails must be installed at a 45-degree angle into the bottom flange of the prefabricated wood I-joist, as shown in the detail in Figure 16B (on this page). These nails are designated as PAN nails.
[5] Web stiffeners must be installed on wood I-joists, with the following exception: An alternate reduced uplift capacity of 230 lbf can be obtained without using web stiffeners and all of the specified joist nails indicated in the table by installing two angled PAN nails at the hanger seat into the bottom flange of the wood I-joist as shown in the detail in Figure 16B (on this page).
[6] For joist members other than prefabricated wood I-joists, lateral support must be provided at the ends in accordance with Section 2308.8.6 of the 2024 IBC (Section 2308.4.6 of the 2021, 2018, 2015 and 2012 IBC) or Section R502.7 of the IRC.
[7] The tabulated allowable loads are based on the use of prefabricated wood I-joists having flanges with an allowable compression perpendicular-to-grain, $F_{c\perp}$, of 750 psi. When use is to support members having an $F_{c\perp}$ of less than 750 psi, it must be verified that the combination of bearing capacity and joist nail capacity is adequate.

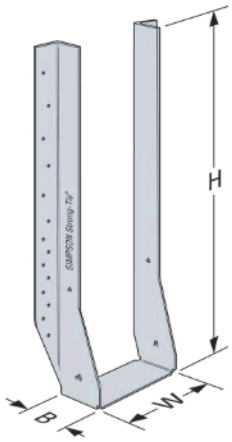

FIGURE 16A—MIU JOIST HANGER

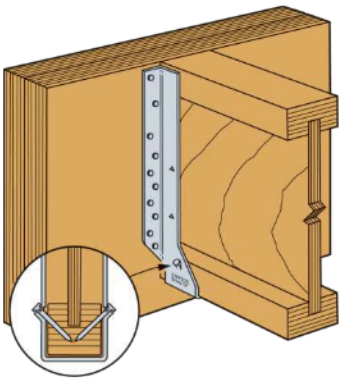

FIGURE 16B—ALTERNATE MIU JOIST HANGER INSTALLATION (See Footnotes 4 and 5 to Table 16)

TABLE 17A—ALLOWABLE LOADS FOR DU, DHU AND DHUTF SERIES JOIST HANGERS

MODEL SERIES	PRODUCT DIMENSIONS (inches)				INSTALLATION CONDITION [1,6,7]	ALLOWABLE LOADS (lbf)	
	W	H	Ga	B		Uplift C_D=1.60[3,4]	Download C_D=1.00[2]
DU	$1^{9}/_{16}$ to $2^{3}/_{8}$	$9^{1}/_{8}$ to $15^{15}/_{16}$	14	2.5	Over (2) layers $^{5}/_{8}$" gypsum wallboard	95	1,110
DHU DHUTF	$1^{9}/_{16}$ to $3^{9}/_{16}$	$9^{1}/_{8}$ to $23^{15}/_{16}$	12	2.5	Over (2) layer $^{5}/_{8}$" gypsum wallboard	95	1,410[5]

For **SI**: 1 inch = 25.4 mm, 1 lbf = 4.45N.

[1]Loads assume two layers of $^{5}/_{8}$-inch-thick Type X gypsum wallboard fastened using, at a minimum, the fastener schedule in Items 14-1.5 in IBC Table 721.1(2). Wall assembly must consist of minimum two 2x4 top plate members with studs spaced not more than 16 inches on center. Top plate member splices must occur at a stud location.
[2]Hangers spaced closer than 16 inches on center shall reduce capacity proportionately.
[3]Triangle nail holes may be filled with (4) additional 10d x $1^{1}/_{2}$inch-long nails to achieve an allowable uplift load of 750 lbf.
[4]DF carried members with minimum 1½ inches x $2^{1}/_{2}$ inches solid sawn dimensions increase the allowable uplift load to 170 lbf
[5]Allowable download may be increased to 1,610 lbf for DF/SP using the DHU3.56/24 or DHUTF3.56/24 model hangers.
[6]DU and DHU are mounted with the top of the hanger flush with the top of the wall and tight to the gypsum wallboard.
[7]Wall top plates must be restrained to prevent rotation. Use an SSP stud plate tie to connect the wall top plate to each wall stud on the opposite face of the wall or provide equivalent restraint by another method as determined by the designer. The Simpson Strong-tie Company SSP is a cold-formed, galvanized steel, strap connector that has a bent end that when installed bears on the top of the wall top plate. The SSP is to be attached to the side of the wall top plates with three 10d common nails, and attached to the wall stud with four 10d common nails.

TABLE 17B—FASTENER SCHEDULE FOR DHU, DHU AND DHUTF SERIES HANGERS

SERIES	FASTENERS		
	Joist[1]	Face	Top
DU	(2) 10d x $1^{1}/_{2}$"	(4) SDS $^{1}/_{4}$" x 3.5"	-
DHU	(2) 10d x $1^{1}/_{2}$"	(8) SDS $^{1}/_{4}$" x 3.5"	-
DHUTF	(2) 10d x $1^{1}/_{2}$"	(8) SDS $^{1}/_{4}$" x 3.5"	(6) 10d x $1^{1}/_{2}$"

[1]The two nails must be installed in the positive angle nailing (PAN) holes close to the hanger seat.

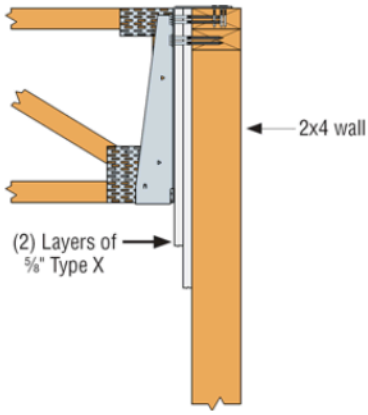

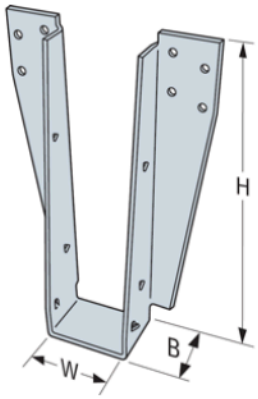

DHU (DU Similiar)

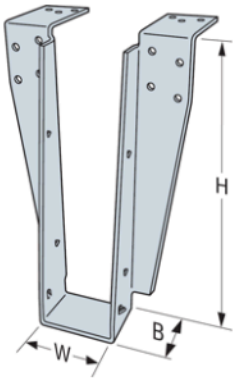

DHUTF

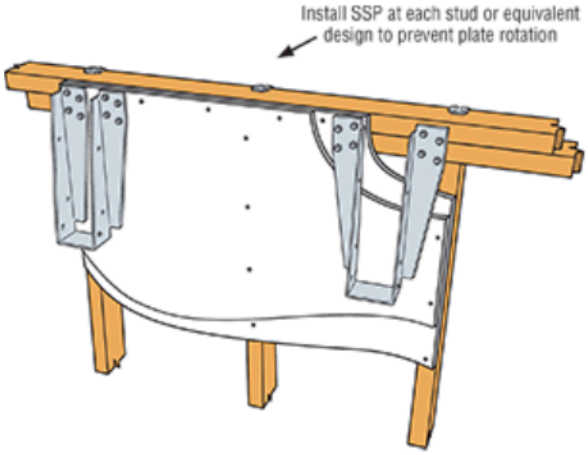

Typical DHU Installation

FIGURE 17—DU, DHU AND DHUTF HANGERS

TABLE 18A—CBH JOIST TO BEAM ALLOWABLE LOADS[3,4]

MODEL NO.	DIMENSIONS[1] (inches)		FASTENERS (Quantity-Type)		ALLOWABLE DOWNLOADS[2] (lbf)
	W	H	Joist	Beam	C_D=1.00/ 1.15/1.25
CBH2.37x5.5	$2^3/_8$	$5^1/_2$	13-SDS $^1/_4$" x 6"	13-SDS $^1/_4$" x 3"	5,045
CBH2.37x7.63	$2^3/_8$	$7^5/_8$	18-SDS $^1/_4$" x 6"	18-SDS $^1/_4$" x 3"	6,790
CBH2.37x9.75	$2^3/_8$	$9^3/_4$	23-SDS $^1/_4$" x 6"	23-SDS $^1/_4$" x 3"	9,175

TABLE 18B—CBH JOIST TO COLUMN ALLOWABLE LOADS[3,4]

MODEL NO.	DIMENSIONS[1] (inches)		FASTENERS (Quantity-Type)		ALLOWABLE DOWNLOADS[2] (lbf)
	W	H	Joist	Column	C_D=1.00/ 1.15/1.25
CBH2.37x5.5	$2^3/_8$	$5^1/_2$	13-SDS $^1/_4$" x 6"	13-SDS $^1/_4$" x 6"	5,460
CBH2.37x7.63	$2^3/_8$	$7^5/_8$	18-SDS $^1/_4$" x 6"	18-SDS $^1/_4$" x 6"	6,925
CBH2.37x9.75	$2^3/_8$	$9^3/_4$	23-SDS $^1/_4$" x 6"	23-SDS $^1/_4$" x 6"	9,335

For **SI:** 1 inch = 25.4 mm, 1 lbf = 4.45 N.

[1]Refer to Figure 18 (this page) for definitions of hanger nomenclature (W, H).
[2]Tabulated allowable loads must be selected based on duration of load as permitted by the applicable building code.
[3]The provided capacities are for the following installation conditions:

- The hanger must be installed at the center of the width of the joist, with the stud toward the top of the joist.
- The joist width must be a minimum of 5.5 inches.
- The minimum distance measured vertically from the top of the hanger to the top fibers of the joist must be a minimum of $1^7/_8$ inches.
- The minimum distance measured vertically from the bottom of the hanger to the bottom fibers of the joist must be a minimum of $^7/_8$ inch.
- The minimum distance measured vertically from the top of the hanger to the top fibers of the beam must be a minimum of $^7/_8$ inch.
- The minimum distance measured vertically from the bottom of the hanger to the bottom fibers of the beam must be a minimum of $1^3/_{16}$ inches.
- The supporting member must be thick enough to allow the fasteners to be fully encapsulated in the wood.

[4]The torsion capacity of the CBH hanger is outside the scope of this evaluation report.

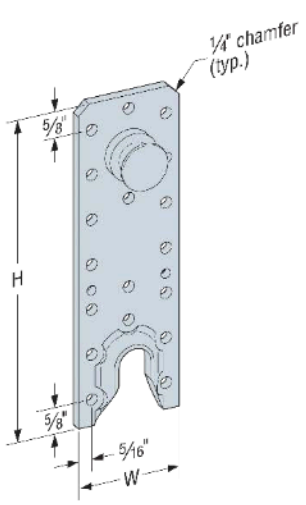

CBH Series Hanger

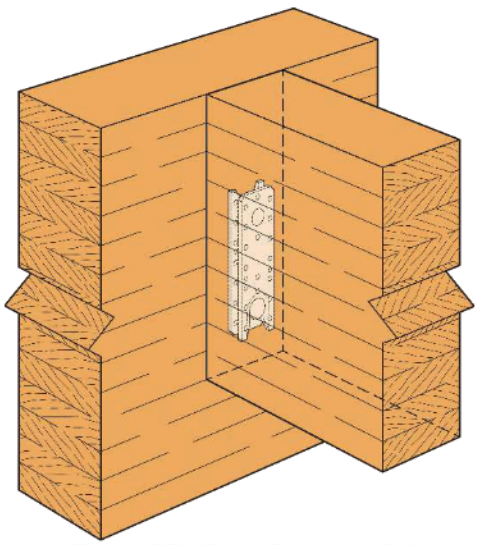

Typical CBH Beam-Beam Installation
Beam-Column Installation Similar

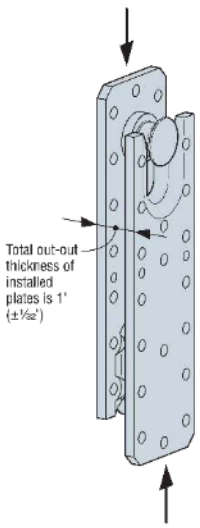

Typical CBH Assembly

FIGURE 18—CBH CONCEALED BEAM HANGERS

TABLE 19—ACBH & SCBH ALLOWABLE LOADS[3,4]

MODEL	DIMENSIONS[1] (inches)		FASTENERS (Quantity – Type)			ALLOWABLE DOWNLOADS[2] (lbf)	
	W	H	Supported Beam	Supporting Column Straight[5]	Supporting Column Inclined[5]	C_D = 1.00	C_D = 1.15/1.25
ACBH3x15.37	3	$15^3/_8$	(24) SDCF22614	(7) SDCF22434	(17) SDCF22434	19,870	20,875
ACBH3x15.37	3	$15^3/_8$	(24) SDCF22614	(7) SDCF22614	(17) SDCF22614	20,050	21,130
SCBH3x15.37	3	$15^3/_8$	(24) SDCF22614	(7) SDCF22434	(17) SDCF22434	19,820	21,935

For **SI:** 1 inch = 25.4 mm, 1 lbf = 4.45 N.

[1]Refer to Figure 19 (this page) for definitions of hanger nomenclature (W, H).
[2]Tabulated allowable loads must be selected based on duration of load as permitted by the applicable building code.
[3]The provided capacities are for the following installation conditions:

- The hanger must be installed at the center of the width of the beam, with the stud toward the top of the beam.
- The beam width must be a minimum of $5^3/_4$ inches.
- The minimum distance measured vertically from the top of the hanger to the top fibers of the beam must be a minimum of $1^3/_4$ inches.
- The minimum distance measured vertically from the bottom of the hanger to the bottom fibers of the beam must be a minimum of 1 inch.
- The column must be wide enough to fit the full width of the beam and deep enough to allow the fasteners to be fully encapsulated in the wood.

[4]The torsion capacity of the ACBH and SCBH hanger is outside the scope of this evaluation report.
[5]SDCF screws are installed perpendicular to the wood face (straight) and at a 45 degree inclined angle (inclined).

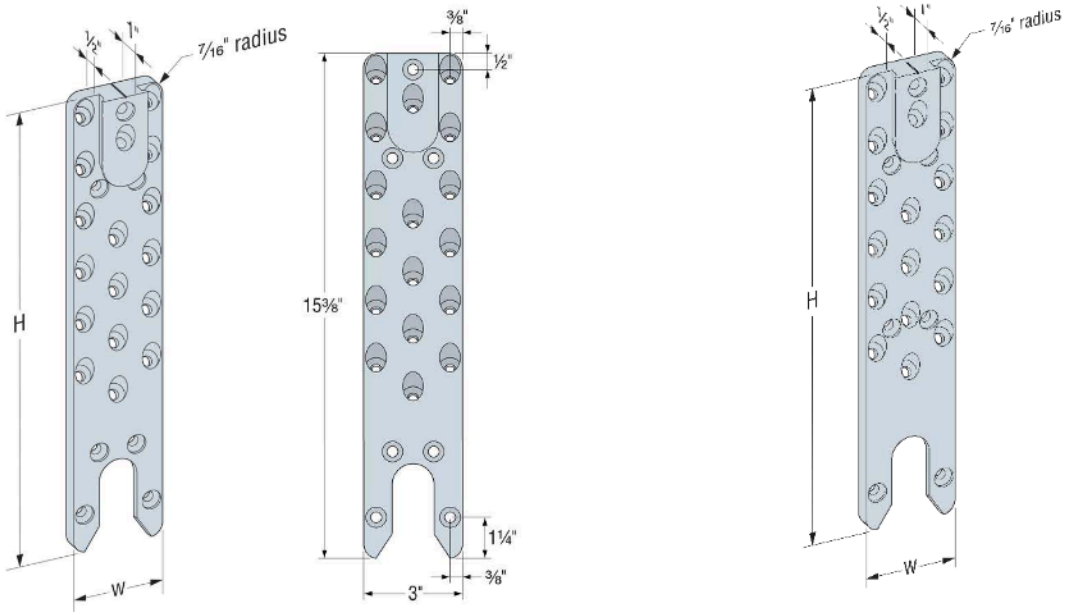

ACBH Series Hanger **SCBH Series Hanger**

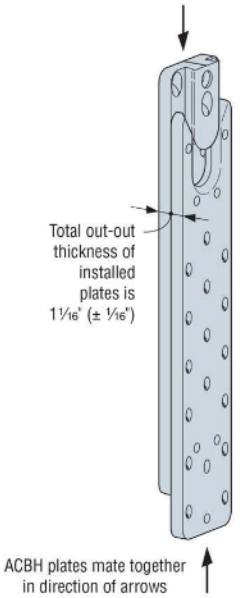

Typical ACBH Assembly (SCBH is similar)

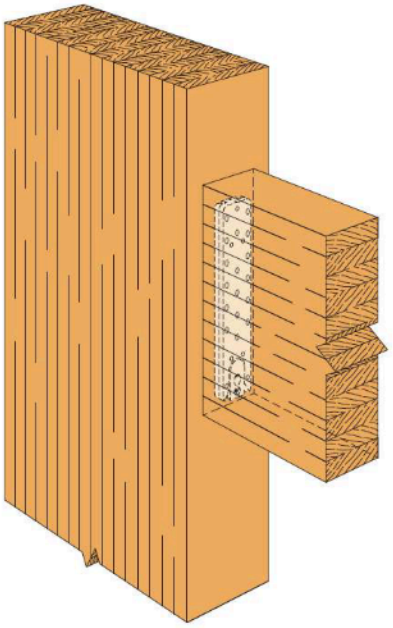

Typical ACBH Beam-Column Installation (SCBH is similar)

FIGURE 19—ACBH & SCBH CONCEALED BEAM HANGERS

TABLE 20—HSKP ALLOWABLE LOADS[2,4,5]

MODEL	DIMENSIONS[1] (inches)				BEARING[3]		SDCF FASTENERS (Quantity) Type					ALLOWABLE DOWNLOADS (lbf)
							Suported Beam		Supporting Column			
	W	H	L	H_s	$B_{w\text{-}min}$	$B_{l\text{-}min}$	Beam Seat	Bearing Reinf.	Shear Group A	Inclined Group A	Shear Group B	C_D=1.00/ 1.15/1.25
HSKP5.75x14.5	5 3/4	14 1/2	9	7	2 1/2	8	(2)27614	-	(6)27614	(8)27614	(6)22858	22,420
HSKP5.75x17	5 3/4	17	9	8	2 1/2	8	(2)27614	(2)22858	(6)27614	(12)27614	(6)22858	26,800
HSKP5.75x19.5	5 3/4	19 1/2	9	9 1/4	2 3/8	8	(2)27614	(4)22858	(6)27614	(16)27614	(6)22858	31,930

For SI: 1 inch = 25.4 mm, 1 lbf = 4.45 N

[1]Refer to Figure 20 (this page) for definitions of hanger nomenclature (W,H,L,H_s) and bearing area requirements ($B_{w\text{-}min}$, $B_{l\text{-}min}$)

[2]The provided capacities are for the following conditions:

- The hanger must be installed at the center of the width of the beam.
- The carried beam width must be a minimum of 5 3/4 inches and its height above the HSKP bearing plate must be greater than or equal to H.
- The column must have a minimum width of 8 1/2 inches and must be deep enough to allow the fasteners to be fully encapsulated in the wood.

[3]$B_{w\text{-}min}$ and $B_{l\text{-}min}$ are the minimum bearing width and length, respectively. The reinforced bearing connection between the HSKP5.75x17 and HSKP5.75x19.5 hanger and the supported beam is outside the scope of this evaluation report.

[4]The torsion capacity of the HSKP hanger is outside the scope of this evaluation report.

[5]Instructions for installation of HSKP fasteners:

- Install SDCF27614 screws, perpendicular to the wood face, through the six round holes in Shear Group A, depicted in Figure 20, and SDCF22858 screws, perpendicular to the wood face, through the six round holes in Shear Group B.
- Install SDCF27614 screws through the shear group A tab features inclined 45 degrees up and rotated 15 degrees toward the middle of the back plate filling all tab hole locations. See Figure 20 for inclined and rotated SDCF orientation.
- Install SDCF22858 bearing reinforcement screws into the bottom of the supported member as required. To insure SDCF fasteners are normal to the bottom face of the supported member, pre-drill 5/32-inch (4 mm) pilot holes prior to installation. See Figure 20 for SDCF bearing reinforcement location requirements.
- With the carried beam in position on the HSKP bearing plate, install the two SDCF27614 screws into the bottom of the carried member through the two countersunk holes in the bottom of the HSKP bearing plate.

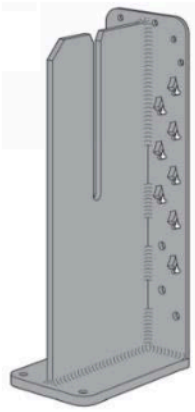

Typical HSKP (HSKP5.75X19.5 shown)

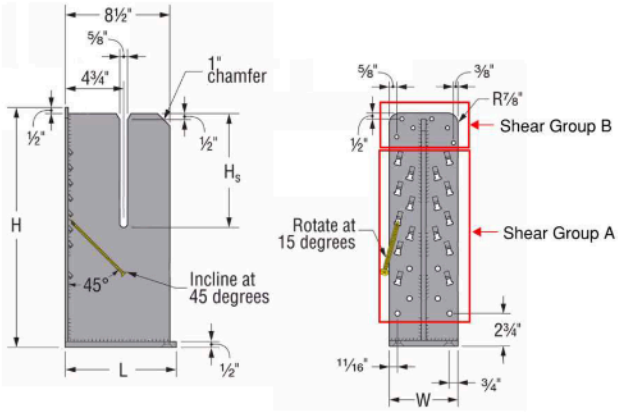

HSKP Dimensions and Inclined SDCF Orientation

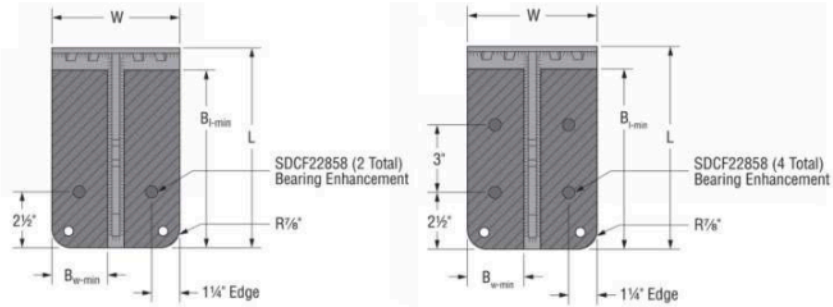

Top View of HSKP Indicating SDCF Bearing Reinforcement Locations and Carried Member Minimum Bearing Area Requirements

FIGURE 20—HEAVY SEATED KNIFE PLATE HANGER

(Continued)

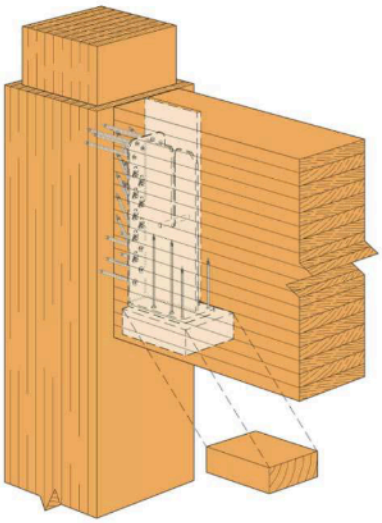

Typical HSKP Assembly

FIGURE 20—HEAVY SEATED KNIFE PLATE HANGER (Continued)

DIVISION: 06 00 00—WOOD, PLASTICS AND COMPOSITES
Section: 06 05 23—Wood, Plastic, and Composite Fastenings

REPORT HOLDER:

SIMPSON STRONG-TIE COMPANY INC.

EVALUATION SUBJECT:

SIMPSON STRONG-TIE® FACE-MOUNT HANGERS FOR SAWN LUMBER, STRUCTURAL COMPOSITE LUMBER (SCL), PREFABRICATED WOOD I-JOISTS AND GLULAM BEAMS (ENGINEERED WOOD PRODUCTS)

1.0 REPORT PURPOSE AND SCOPE

Purpose:

The purpose of this evaluation report supplement is to indicate that Simpson Strong-Tie® face-mount hangers for sawn lumber, structural composite lumber (SCL), prefabricated wood I-joists and glulam beams (engineered wood products), described in ICC-ES evaluation report ESR-2552, have also been evaluated for compliance with the codes noted below as adopted by the Los Angeles Department of Building and Safety (LADBS).

Applicable code editions:

- 2023 *City of Los Angeles Building Code* (LABC)
- 2023 *City of Los Angeles Residential Code* (LARC)

2.0 CONCLUSIONS

The Simpson Strong-Tie® face mount hangers for sawn lumber, structural composite lumber (SCL), prefabricated wood I-joists and glulam beams (engineered wood products), described in Sections 2.0 through 7.0 of the evaluation report ESR-2552, comply with the LABC Chapter 23, and the LARC, and are subjected to the conditions of use described in this supplement.

3.0 CONDITIONS OF USE

The Simpson Strong-Tie® face mount hangers for sawn lumber, structural composite lumber (SCL), prefabricated wood I-joists and glulam beams (engineered wood products), described in this evaluation report supplement, must comply with all of the following conditions:

- All applicable sections in the evaluation report ESR-2552.
- The design, installation, conditions of use and identification are in accordance with the 2021 *International Building Code®* (2021 IBC) provisions noted in the evaluation report ESR-2552.
- The design, installation and inspection are in accordance with additional requirements of LABC Chapters 16 and 17, as applicable.
- The supported end of a joist or beam must be within $^{1}/_{4}$-inch from the supporting member.
- Solid blocking must be required for all joist hangers supporting roof joists having one end twisted more than one-half degree per foot of length relative to the other end, except as specifically noted in the evaluation report.
- Under the LARC, an engineered design in accordance with LARC Section R301.1.3 must be submitted.

This supplement expires concurrently with the evaluation report, reissued March 2024 and revised August 2024

ICC-ES Evaluation Reports are not to be construed as representing aesthetics or any other attributes not specifically addressed, nor are they to be construed as an endorsement of the subject of the report or a recommendation for its use. There is no warranty by ICC Evaluation Service, LLC, express or implied, as to any finding or other matter in this report, or as to any product covered by the report.

Copyright © 2024 ICC Evaluation Service, LLC. All rights reserved.

DIVISION: 06 00 00—WOOD, PLASTICS AND COMPOSITES
Section: 06 05 23—Wood, Plastic, and Composite Fastenings

REPORT HOLDER:

SIMPSON STRONG-TIE COMPANY INC.

EVALUATION SUBJECT:

SIMPSON STRONG-TIE® FACE-MOUNT HANGERS FOR SAWN LUMBER, STRUCTURAL COMPOSITE LUMBER (SCL), PREFABRICATED WOOD I-JOISTS AND GLULAM BEAMS (ENGINEERED WOOD PRODUCTS)

1.0 REPORT PURPOSE AND SCOPE

Purpose:

The purpose of this evaluation report supplement is to indicate that the Simpson Strong-Tie® face-mount hangers, described in ICC-ES evaluation report ESR-2552, have also been evaluated for compliance with the codes noted below.

Applicable code editions:

- 2023 *Florida Building Code—Building*
- 2023 *Florida Building Code—Residential*

2.0 CONCLUSIONS

The Simpson Strong-Tie® face-mount hangers, described in Sections 2.0 through 7.0 of ICC-ES evaluation report ESR-2552, comply with the *Florida Building Code—Building*, and the *Florida Building Code—Residential*, provided the design requirements are determined in accordance with the *Florida Building Code—Building* or the *Florida Building Code—Residential,* as applicable. The installation requirements noted in ICC-ES evaluation report ESR-2552 for the 2021 *International Building Code®* meet the requirements of the *Florida Building Code—Building* or the *Florida Building Code—Residential,* as applicable.

Use of the Simpson Strong-Tie® face-mount hangers has also been found to be in compliance with the High-Velocity Hurricane Zone provisions of the *Florida Building Code—Building*, and the *Florida Building Code—Residential* with the following condition:

a. For connections subject to uplift, the connection must be designed for no less than 700 pounds (3114 N).

For products falling under Florida Rule 61G20-3, verification that the report holder's quality assurance program is audited by a quality assurance entity approved by the Florida Building Commission for the type of inspections being conducted is the responsibility of an approved validation entity (or the code official when the report holder does not possess an approval by the Commission).

This supplement expires concurrently with the evaluation report, reissued March 2024 and revised August 2024.

ICC-ES Evaluation Reports are not to be construed as representing aesthetics or any other attributes not specifically addressed, nor are they to be construed as an endorsement of the subject of the report or a recommendation for its use. There is no warranty by ICC Evaluation Service, LLC, express or implied, as to any finding or other matter in this report, or as to any product covered by the report.

Copyright © 2024 ICC Evaluation Service, LLC. All rights reserved.