ICC-ES Evaluation Report

ESR-3096

Reissued January 2024

This report also contains:

- LABC Supplement

Subject to renewal January 2025

ICC-ES Evaluation Reports are not to be construed as representing aesthetics or any other attributes not specifically addressed, nor are they to be construed as an endorsement of the subject of the report or a recommendation for its use. There is no warranty by ICC Evaluation Service, LLC, express or implied, as to any finding or other matter in this report, or as to any product covered by the report.

Copyright © 2024 ICC Evaluation Service, LLC. All rights reserved.

DIVISION: 06 00 00—WOOD, PLASTICS AND COMPOSITES **Section: 06 05 23—Wood, Plastic, and Composite Fastenings**	**REPORT HOLDER: SIMPSON STRONG-TIE COMPANY INC.**	**EVALUATION SUBJECT: SIMPSON STRONG-TIE® CONNECTORS USING SD-SERIES SCREWS**	

1.0 EVALUATION SCOPE

Compliance with the following codes:

- 2021, 2018, 2015, 2012, and 2009 *International Building Code®* (IBC)
- 2021, 2018, 2015, 2012, and 2009 *International Residential Code®* (IRC)

For evaluation for compliance with codes adopted by *Los Angeles Department of Building and Safety* (LADBS), see ESR-3096 LABC and LARC Supplement.

Property evaluated:

Structural

2.0 USES

The Simpson Strong-Tie® structural connectors described in this report are used as wood framing connectors in accordance with Section 2304.10.4 of the 2021 IBC [Section 2304.10.3 of the 2018 and 2015 IBC and Section 2304.9.3 of the 2012 and 2009 IBC]. The products may also be used in structures regulated under the IRC when an engineered design is submitted in accordance with Section R301.1.3 of the IRC.

3.0 DESCRIPTION

3.1 General:

The structural connectors described in this report are used as wood-to-wood connections in structural systems that have been designed to transfer loads from their point of origin to load-resisting elements. All connectors are attached to wood using SD-Series screws recognized in ICC-ES evaluation report ESR-3046.

3.1.1 A21 and A23 Series Angles: The A21 and A23 angles are used to transfer lateral loads between wood framing members. They are fabricated from No. 18 gage steel. See Table 1 and Figure 1 for model numbers, dimensions, fastener schedules, allowable loads and a typical installation detail.

3.1.2 A33 and A44 Series Angles: The A33 and A44 angles are used to transfer lateral loads between wood framing members. They are fabricated from No. 12 gage steel. See Table 2 and Figure 2 for model numbers, dimensions, fastener schedules, allowable loads and a typical installation detail.

3.1.3 GA Gusset Angles: The GA1 and GA2 gusset angles are used to transfer lateral loads between wood framing members. They are fabricated from No. 18 gage steel. See Table 3 and Figure 3 for model numbers, dimensions, fastener schedules, allowable loads and a typical installation detail.

3.1.4 L Framing Connectors: The L framing connectors are used to transfer lateral loads between wood framing members. They are fabricated from No. 16 gage steel. See Table 4 and Figure 4 for model numbers, dimensions, fastener schedules, allowable loads and a typical installation detail.

3.1.5 A34 and A35 Framing Angles: The A34 and A35 framing angles are used to transfer lateral and uplift loads between wood framing members. They are fabricated from No. 18 gage steel. The connectors have cutouts on each leg and a prong to aid in installation. See Table 5 and Figure 5 for model numbers, dimensions, fastener schedules, allowable loads and typical installation details.

3.1.6 LTP4 Lateral Tie Plate: The LTP4 lateral tie plate transfers shear force from the wood top plate to wood rim joist or blocking members. It is fabricated from No. 20 gage steel. See Table 6 and Figure 6 for model numbers, dimensions, fastener schedules, allowable loads and typical installation details.

3.1.7 DJT14Z Deck Joist Tie: DJT14Z connector is used to attach joists to posts. It is fabricated from No. 14 gage steel. See Table 7 and Figure 7 for model numbers, dimensions, fastener schedules, allowable loads and a typical installation detail.

3.1.8 Hurricane Ties: Hurricane Ties are designed to tie rafters or joists to wall plates or studs. The H1, H2.5, H2.5A, H5, H8, and H10 are fabricated from 18 gage steel. The H4 is fabricated from 20 gage steel. See Table 8 and Figure 8 for model numbers, dimensions, fastener schedules, allowable loads and typical installation details.

3.1.9 RSP4 Reversible Stud Plate Tie: The RSP4 tie is designed to connect a nominally 2-inch-wide wood stud to either the double top plate or to the mudsill. The locating tabs aid in placing the tie on the double top plates or a single bottom plate. It is fabricated from 20-gage steel. See Table 9 and Figure 9 for model numbers, dimensions, fastener schedules, allowable loads and typical installation details.

3.1.10 AC Series Post Caps: The AC post caps are used in pairs to transfer uplift and in-plane lateral loads between a beam and a post. They are fabricated from 18-gage steel. See Table 10 and Figure 10 for model types, dimensions, fastener schedules and allowable loads.

3.1.11 LCE4 Post Cap: The LCE post cap is used in pairs to transfer uplift and in-plane lateral loads between a beam and a post. It is fabricated from 20-gage steel. See Table 11 and Figure 11 for model numbers, dimensions, fastener schedules, allowable loads and a typical installation detail.

3.1.12 BC and BCS Series Post Caps: The BC and BCS are used to connect a beam to the end of a post. The BC and BCS post caps are designed to be used with beams having a width less than or equal to the post width, and can connect a continuous beam or the end of a beam to a post. The BCS has dome-shaped nail holes through which screws must be installed into the beam at a 45-degree angle. They are fabricated from 18-gage steel. See Table 12 and Figure 12 for model numbers, dimensions, fastener schedules, allowable loads and a typical installation detail.

3.1.13 BCO Series Post Bases: The BCO are used to connect the base of a post to a wood supporting member. They are fabricated from 18-gage steel. See Table 13 and Figure 13 for model numbers, dimensions, fastener schedules, allowable loads and a typical installation detail.

3.1.14 LPC4Z Light Post Cap: The LPC Light Post Cap is used in pairs to transfer uplift and in-plane lateral loads between a beam and a post. It is fabricated from 18-gage steel. See Table 14 and Figure 14 for model numbers, dimensions, fastener schedules, allowable loads and a typical installation detail.

3.1.15 PC and EPC Series Post Caps: The PC and EPC post caps are used to transfer uplift and in-plane lateral loads between a beam and a post. The EPC post caps are designed for end-post connections at the end of a beam. They are fabricated from 12 or 16 gage steel. Model numbers with a "-16" suffix are formed from 16-gage material. See Table 15 and Figure 15 for model numbers, dimensions, fastener schedules, allowable loads and typical installation details.

3.1.16 ABA Post Base Standoff: The ABA post base standoff elevates the post above concrete floors. A standard plate washer must be installed between the nut and the device along the anchor bolt. The ABA44 and ABA44R are fabricated from 16 gage and all other sizes from 14 gage steel. See Table 16 and Figure 16 for model numbers, dimensions, fastener schedules, allowable loads and a typical installation detail.

3.1.17 ABU Series Adjustable Post Base: The ABU adjustable post base connects a wood post to a concrete footing, elevating the base of the post 1 inch (25.4 mm) above the concrete footing. The ABU connector consists of a 16-gage channel, 12-gage standoff base and a 7-gage bearing plate. See Table 17 and Figure 17 for model numbers, dimensions, fastener schedules, allowable loads and a typical installation detail.

3.1.18 LU Series Hangers: The LU series hangers connect a joist to a supporting member such as a ledger or header. The models that support a single ply joist are fabricated from 20 gage steel. See Table 18 and Figure 18 for model numbers, dimensions, fastener schedules and allowable loads.

3.1.19 LUCZ Series Hangers: The LUCZ hangers connect a joist to a supporting member such as a ledger or header. They have concealed flanges to allow for installation near the end of the supporting member. They are fabricated from 18 gage steel. See Table 19 and Figure 19 for model numbers, dimensions, fastener schedules, allowable loads and a typical installation detail.

3.1.20 LUS Series Hangers: The LUS series hangers connect a joist to a supporting member such as a ledger or header. The joist fasteners must be installed at a 45-degree angle through the joist and into the header. They are fabricated from 18 gage steel. See Table 20 and Figure 20 for model numbers, dimensions, fastener schedules and allowable loads.

3.1.21 HUS Series Hangers: The HUS series hangers connect a joist to a supporting member such as a ledger or header. The joist fasteners must be installed at a 45-degree angle through the joist and into the header. They are fabricated from 16 gage steel. See Table 21 and Figure 21 for model numbers, dimensions, fastener schedules and allowable loads.

3.1.22 RR Ridge Rafter Connector: The RR ridge rafter connector supports a nominally 2-inch-wide rafter from a ridge board when the ridge board is a structural support. It is fabricated from 18 gage steel. The RR ridge rafter connector may be used with a rafter having a maximum slope of 7:12 (30 degrees). See Table 22 and Figure 22 for model numbers, dimensions, fastener schedules, allowable loads and a typical installation detail.

3.1.23 MTS Twist Straps: The MTS twist straps are used to connect wood trusses and wood rafters to double wood top plates, beams or studs and resist uplift loads. They are fabricated from 16 gage steel. See Table 23 and Figure 23 for model numbers, dimensions, fastener schedules, allowable loads and typical installation details.

3.1.24 ST Series Straps: The ST9, ST12, ST18, and ST 22 straps are 9 to $21^{5}/_{8}$ inches (229 to 549 mm) long and $1^{1}/_{4}$ inches (31.8 mm) wide. Each strap has unevenly spaced, $^{11}/_{64}$-inch-diameter (4.3 mm), prepunched fastener holes. See Figure 24 for a drawing of the ST9, ST12, ST18, and ST 22 tie straps.

The ST292, ST2122, ST2215, ST6215, ST6224, and ST6236 straps are $9^{5}/_{16}$ to $33^{13}/_{16}$ inches (236.5 to 858.8 mm) long, and have a constant width of $1^{13}/_{16}$ inches (46 mm). The total strap width between longitudinal edges is $2^{1}/_{16}$ inches (52.4 mm). Notches are $^{9}/_{32}$ inch (7.1 mm) deep and are spaced $1^{3}/_{4}$ inches (44.5 mm) on center. Each longitudinal edge of an ST strap has a row of $^{11}/_{64}$-inch-diameter (4.3 mm) prepunched fastener holes, spaced $1^{3}/_{4}$ inches (44.5 mm) on center. See Figure 25 for drawings of the ST292, ST2122, ST2215, ST6215, ST6224, and ST6236 tie straps.

The ST2115 strap is $16^{5}/_{16}$ inches (414.3 mm) long and $^{3}/_{4}$ inch (19.1 mm) wide, and has one row of $^{11}/_{64}$-inch-diameter (4.3 mm), prepunched fastener holes, spaced$1^{5}/_{8}$ inches (41.3 mm) on center. See Figure 26 for a drawing of the ST2115 tie strap.

See Table 24 for ST Series tie strap dimensions, fastener schedules, and allowable tension loads.

3.1.25 MST Series Straps: The MST Series tie straps are 27 to $37^{1}/_{2}$ inches long (686 to 953 mm) and $2^{1}/_{16}$ inches (52.4 mm) wide. Each strap has two rows of $^{11}/_{64}$-inch-diameter (4.3 mm) prepunched fastener holes spaced $1^{3}/_{4}$ inches (43.7 mm) on center. Additionally, the straps have $^{5}/_{8}$-inch-diameter (15.9 mm) prepunched bolt holes spaced $5^{1}/_{4}$ inches (133.4 mm) on center. See Figure 27 for a drawing of the MST Series tie straps. See Table 25 for strap dimensions, fastener schedules, and allowable tension loads.

3.1.26 LSTA and MSTA Series Straps: The LSTA and MSTA Series tie straps are 9 to 49 inches (229 to 1245 mm) long and $1^{1}/_{4}$ inches (32 mm) wide. Each strap has one row of staggered $^{11}/_{64}$-inch-diameter (4.3 mm) prepunched fastener holes. The MSTA49 has $^{5}/_{32}$-inch-diameter (4.0 mm) prepunched fastener holes. Longitudinal spacing (pitch) of consecutive holes is $1^{1}/_{2}$ inches (38 mm), and the transverse distance (gage) between staggered holes is $^{9}/_{16}$ inch (14.3 mm). For the MSTA49, the longitudinal spacing (pitch) of consecutive holes is $1^{17}/_{32}$ inches (38.9 mm), and the transverse distance (gage) between staggered holes is $^{1}/_{2}$ inch (12.7 mm). Both ends of every strap (except for the MSTA49) have one fastener hole located between the last two staggered holes. See Figure 28 for a drawing of the LSTA and MSTA Series tie straps. See Table 26 for strap dimensions, fastener schedules, and allowable tension loads.

3.1.27 LSTI Series Straps: The LSTI Series tie straps are either 49 or 73 inches (1244 or 1854 mm) long and $3^{3}/_{4}$ inches (95 mm) wide. Each strap has two rows of staggered $^{5}/_{32}$-inch diameter (4.0 mm) prepunched fastener holes. Longitudinal spacing (pitch) of consecutive holes in a row is 3 inches (76 mm), and the

transverse distance (gage) between staggered holes in a row is $^3/_8$ inch (9.5 mm). See Figure 29 for a drawing of the LSTI Series tie straps. See Table 26 for strap dimensions, fastener schedules, and allowable tension loads.

3.1.28 MSTI Series Straps: The MSTI Series tie straps are $2^1/_{16}$ inches (52.4 mm) wide and from 26 to 72 inches (660 to 1829 mm) long. Each strap has three rows of $^5/_{32}$-inch-diameter (4.0 mm) prepunched fastener holes spaced 3 inches (76 mm) on center. The holes in adjacent rows are offset by 1 inch (25.4 mm), resulting in one fastener hole per inch of strap. See Figure 30 for a drawing of the MSTI Series tie straps. See Table 26 for strap dimensions, fastener schedules, and allowable tension loads.

3.1.29 MSTC Series Straps: The MSTC Series tie straps are $28^1/_4$ to $77^3/_4$ inches (718 to 1975 mm) long and 3 inches (76 mm) wide. The straps have two rows of staggered prepunched fastener holes spaced $1^1/_2$ inches (38.1 mm), measured from center-to-center of holes. On the screw head side of the strap, the holes are oblong and measure $^{13}/_{64}$ inch wide by $^9/_{32}$ inch long (5.1 mm by 7.1 mm), and are chamfered at 120 degrees. On the wood side of the strap, the holes are $^{11}/_{64}$ inch wide by $^1/_4$ inch long (4.4 mm by 6.4 mm). The long direction of the fastener holes is perpendicular to the length of the strap. See Figure 31 for a drawing of the MSTC Series tie straps. See Table 26 for strap dimensions, fastener schedules, and allowable tension loads.

3.1.30 HTP37Z Tie Strap: The HPT37Z tie strap is 7 inches (178 mm) long and 3 inches (76 mm) wide. The straps have five staggered rows of $^5/_{32}$-inch-diameter (4.0 mm) prepunched fastener holes. See Figure 32 for a drawing of the HPT37Z tie strap. See Table 27 for strap dimension, fastener schedules, and allowable tension loads.

3.1.31 HRS Series Straps: The HRS Series tie straps are 6 to 12 inches (152 – 305 mm) long and $1^3/_8$ inches (35 mm) wide. The straps have two staggered rows of $^5/_{32}$-inch-diameter (4.0 mm) prepunched fastener holes. See Figure 33 for a drawing of the HRS series strap. See Table 27 for strap dimension, fastener schedules, and allowable tension loads.

3.2 Material:

3.2.1 Steel: The connectors described in this report are manufactured from galvanized steel complying with ASTM A653, SS designation, with grades, minimum yield and tensile strengths and thicknesses as given in Table 28. The connectors have a minimum G90 zinc coating specification in accordance with ASTM A653. Some models are available with a G185 zinc coating specification in accordance with ASTM A653 (denoted by model numbers ending in the letter Z). Some models are available with a batch hot-dipped galvanized coating having a minimum specified coating weight of 2.0 ounces of zinc per square foot of surface area (600 g/m^2), total for both sides in accordance with ASTM A123 (denoted by model numbers ending with the letters HDG). Model numbers noted in this report do not necessarily include the Z or HDG ending, but the information shown applies. The lumber treater or report holder's recommendations shall be followed as regards minimum corrosion resistance and connection capacities of connectors used with the specific proprietary preservative-treated or fire-retardant treated lumber.

3.2.2 Wood: Wood members with which the connectors are used must be either sawn lumber or engineered lumber having a minimum specific gravity of 0.50 (minimum equivalent specific gravity of 0.50 for engineered lumber), and having a maximum moisture content of 19 percent (16 percent for engineered lumber). The thickness of the wood members to which the connectors are attached must be equal to or greater than the length of the fasteners specified in the tables of this report, or as required by wood member design, whichever is greater.

3.2.3 Fasteners: All connectors are attached to wood with SD Series screws described in ESR-3046. See ESR-3046 for guidance for use in treated wood in regard to the SD Series screws.

4.0 DESIGN AND INSTALLATION

4.1 Design:

The tabulated allowable loads shown in this report are based on allowable stress design (ASD) and include the load duration factor, C_D, corresponding with the applicable loads in accordance with the *National Design Specification* (*NDS*) *for Wood Construction*® and *Supplement*.

Tabulated allowable loads apply to products connected to wood used under dry conditions and where sustained temperatures are 100°F (37.8°C) or less. When products are installed to wood having a moisture content greater than 19 percent (16 percent for engineered wood products), or where wet service is expected, the allowable tension loads must be adjusted by the wet service factor, C_M, specified in the NDS. When

connectors are installed in wood that will experience sustained exposure to temperatures exceeding 100°F (37.8°C), the allowable loads in this report must be adjusted by the temperature factor, C_t, specified in the NDS.

Connected wood members must be analyzed for load-carrying capacity at the connection in accordance with the NDS.

4.2 Installation:

Installation of the connectors must be in accordance with this evaluation report and the manufacturer's published installation instructions. In the event of a conflict between this report and the manufacturer's published installation instructions, this report governs.

4.3 Special Inspection:

4.3.1 Main Wind-force-resisting Systems under the IBC: Where required, periodic special inspection must be conducted for components within the main wind-force-resisting system in accordance with Sections 1704.2 and 1705.12 of the 2021 IBC, Sections 1704.2 and 1705.11 of the 2018 and 2015 IBC, Sections 1704.2 and 1705.10 of the 2012 IBC, and Sections 1704 and 1706 of the 2009 IBC.

4.3.2 Seismic-force-resisting Systems under the IBC: Where required, periodic special inspection must be conducted for components within the seismic-force-resisting system in accordance with Sections 1704.2 and 1705.13 of the 2021 IBC, Sections 1704.2 and 1705.12 of the 2018 and 2015 IBC, Sections 1704.2 and 1705.11 of the 2012 IBC, and Sections 1704 and 1707 of the 2009 IBC.

4.3.3 Installations under the IRC: Special inspections are normally not required for connectors used in structures regulated under the IRC. However, for components and systems requiring an engineered design in accordance with IRC Section R301, periodic special inspection must be in accordance with Sections 4.3.1 and 4.3.2 of this report.

5.0 CONDITIONS OF USE:

The Simpson Strong-tie connectors described in this report comply with, or are suitable alternatives to what is specified in, those codes listed in Section 1.0 of this report, subject to the following conditions:

5.1 The connectors must be manufactured, identified and installed in accordance with this report and the manufacturer's published installation instructions. A copy of the instructions must be available at the jobsite at all times during installation.

5.2 Calculations showing compliance with this report must be submitted to the code official. The calculations must be prepared by a registered design professional where required by the statues of the jurisdiction in which the project is to be constructed.

5.3 Adjustment factors noted in Section 4.1 and the applicable codes must be considered, where applicable.

5.4 Connected wood members and fasteners must comply, respectively, with Sections 3.2.2 and 3.2.3 of this report.

5.5 Use of connectors with preservative- or fire-retardant-treated lumber must be in accordance with Section 3.2.1 of this report. Use of fasteners with preservative- or fire-retardant-treated lumber must be in accordance with Section 3.2.3 of this report.

5.6 The design of anchorage to concrete and the concrete footings is outside the scope of this report.

6.0 EVIDENCE SUBMITTED

6.1 Data in accordance with the ICC-ES Acceptance Criteria for Joist Hangers and Similar Devices (AC13), dated October 2018 (editorially revised December 2020).

6.2 Structural calculations.

6.3 Quality documentation.

7.0 IDENTIFICATION

7.1 The products described in this report are identified with a die-stamped label or an adhesive label, indicating the name of the manufacturer (Simpson Strong-Tie), the model number, and the number of an index evaluation report (ESR-2523) which contains a summary of all the product model numbers in the ICC-ES evaluation reports, listed in that index report, for this manufacturer.

7.2 The report holder's contact information is the following:

SIMPSON STRONG-TIE COMPANY INC.
5956 WEST LAS POSITAS BOULEVARD
PLEASANTON, CALIFORNIA 94588
(800) 999-5099
www.strongtie.com

TABLE 1—A21 AND A23 ANGLES

MODEL NO.	DIMENSIONS (in)			FASTENERS (Quantity-Type)		ALLOWABLE LOADS (lbs) [1,2,3,4]	
	L	W_1	W_2	Base	Post	F_1[5] C_D= 1.6	F_2 C_D= 1.6
A21	$1^3/_8$	2	$1^1/_2$	2-SD9112	2-SD9112	430	165
A23	$2^3/_4$	2	$1^1/_2$	4-SD9112	4-SD9112	670	560

For **SI:** 1 inch = 25.4 mm, 1 lbf = 4.45 N.

1. Tabulated allowable loads have been adjusted for a load duration factor, C_D, of 1.6, corresponding to a ten-minute load duration (i.e., wind or earthquake loading), in accordance with the NDS. The allowable loads do not apply to loads of other durations.
2. F_1 and F_2 loads cannot be combined.
3. The tabulated F_1 and F_2 allowable loads are for a single connector. The terminating member must be constrained against rotation for the F_2 load direction when the angle connectors are not used in pairs.
4. When angles are installed on each side of wood member, the minimum member thickness must be 3 inches.
5. The F_1 load direction is that which results in the terminating member bearing on the flange of the connector. Connectors are required on both sides of the terminating member to resist allowable F_1 loads in both directions.

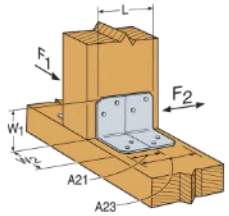

FIGURE 1—A21 AND A23 ANGLE INSTALLATION DETAIL

TABLE 2—A33 AND A44 ANGLES [1]

MODEL NO.	DIMENSIONS (in)			FASTENERS (Quantity-Type)		ALLOWABLE LOADS (lbs)[2,3,4,5]	
	L	W_1	W_2	Base	Post	F_1[6] C_D= 1.6	F_2 C_D= 1.6
A33	$1^1/_2$	3	3	4-SD9112	4-SD9112	830	335
A44	$1^1/_2$	$4^9/_{16}$	$4^3/_8$	4-SD9112	4-SD9112	805	290

For **SI:** 1 inch = 25.4 mm, 1 lbf = 4.45 N.

1. Dimension nomenclature is as follows: L is the width, W_1 is the length of the flange attached to the terminating member, and W_2 is the length of the flange attached to the continuous member.
2. Tabulated allowable loads have been adjusted for a load duration factor, C_D, of 1.6, corresponding to a ten-minute load duration (i.e., wind or earthquake loading), in accordance with the NDS. The allowable loads do not apply to loads of other durations.
3. F_1 and F_2 loads cannot be combined.
4. The tabulated F_1 and F_2 allowable loads are for a single connector. The terminating member must be constrained against rotation for the F_2 load direction when the angle connectors are not used in pairs.
5. When angles are installed on each side of wood member, the minimum member thickness must be 3 inches.
6. The F_1 load direction is that which results in the terminating member bearing on the flange of the connector. Connectors are required on both sides of the terminating member to resist allowable F_1 loads in both directions.

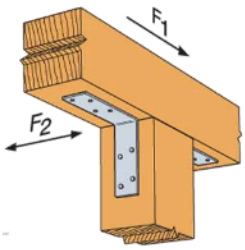

FIGURE 2—A33 AND A44 ANGLE INSTALLATION DETAIL

TABLE 3—GA ANGLES

MODEL NO.	L (in)	FASTENERS (Quantity-Type)	ALLOWABLE LOADS (lbs) [1,2,3,4]							
			F_1				F_2[5]			
			C_D=1.0	C_D=1.15	C_D=1.25	C_D = 1.6	C_D=1.0	C_D=1.15	C_D=1.25	C_D=1.6
GA1	$2^3/_4$	4-SD9112	340	375	375	375	340	395	430	435
GA2	$3^1/_4$	6-SD9112	515	590	640	695	515	590	640	820

For **SI:** 1 inch = 25.4 mm, 1 lbf = 4.45 N.

1. Tabulated allowable loads have been adjusted for load duration factors, C_D, as shown, in accordance with the NDS, and are not permitted to be adjusted for other load durations.
2. F_1 and F_2 loads cannot be combined.
3. The tabulated F_1 and F_2 allowable loads are for a single connector. The terminating member must be constrained against rotation for the F_1 load direction when the angle connectors are not used in pairs.
4. When angles are installed on each side of wood member, the minimum member thickness must be 3 inches.
5. The F_2 load direction is that which results in the terminating member bearing on the flange of the connector. Connectors are required on both sides of the terminating member to resist allowable F_2 loads in both directions.

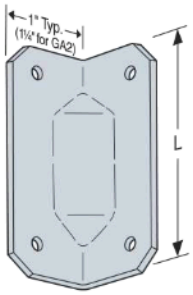

GA1

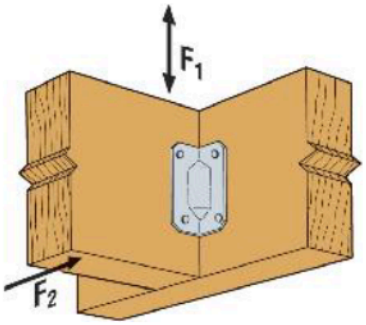

Typical GA Installation

FIGURE 3—GA ANGLE

TABLE 4—L REINFORCING ANGLES

MODEL NO.	L (in)	FASTENERS (Quantity-Type)	ALLOWABLE LOADS (lbs)[1,2,3,4]							
			F_1				F_2[5]			
			C_D=1.0	C_D=1.15	C_D=1.25	C_D=1.6	C_D=1.0	C_D=1.15	C_D=1.25	C_D=1.6
L30	3	4-SD9112	290	290	290	290	340	395	430	545
L50	5	6- SD9112	515	535	535	535	515	590	640	820
L70	7	8- SD9112	685	785	855	1,015	685	785	855	1,095
L90	9	10- SD9112	855	985	1,070	1,180	855	985	1,070	1,370

For **SI:** 1 inch = 25.4 mm, 1 lbf = 4.45 N.

1. Tabulated allowable loads have been adjusted for load duration factors, C_D, as shown, in accordance with the NDS, and are not permitted to be adjusted for other load durations.
2. F_1 and F_2 loads cannot be combined.
3. The tabulated F_1 and F_2 allowable loads are for a single connector. The terminating member must be constrained against rotation for the F_1 load direction when the angle connectors are not used in pairs.
4. When angles are installed on each side of wood member, the minimum member thickness must be 3 inches.
5. The F_2 load direction is that which results in the terminating member bearing on the flange of the connector. Connectors are required on both sides of the terminating member to resist allowable F_2 loads in both directions.

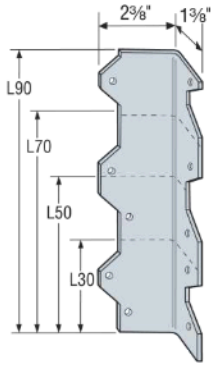

L Angle

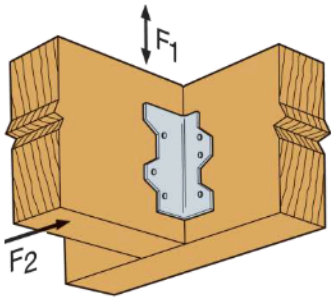

Typical L50 Installation

FIGURE 4—L REINFORCING ANGLE

TABLE 5—A34 AND 35 FRAMING CONNECTORS[1]

MODEL NO.	FASTENERS (Quantity-Type)		DIRECTION OF LOAD	ALLOWABLE LOADS (lbs)[2,3,4,5]		
	Joist	Header/Plate		C_D=1.0	C_D=1.15	C_D=1.25 C_D=1.6
A34	4-SD9112	4- SD9112	F_1	640	640	640
	4-SD9112	4- SD9112	F_2[(6)]	495	495	495
A35	6-SD9112	6-SD9112	F_1	695	695	695
	6-SD9112	6-SD9112	F_2[(6)]	845	845	845
	3-SD9112	6-SD9112	A_1	260	295	320
	3-SD9112	6-SD9112	E	260	295	320
	3-SD9112	6-SD9112	C_1	170	170	170
	6-SD9112	6-SD9112	A_2	260	295	320
	6-SD9112	6-SD9112	C_2	260	295	315
	6-SD9112	6-SD9112	D	150	150	150

For **SI:** 1 inch = 25.4 mm, 1 lbf = 4.45 N.

1. Some illustrations show connections that could cause cross-grain tension or bending of the wood during loading if not reinforced sufficiently. In such cases, mechanical reinforcement should be considered.
2. Tabulated allowable loads have been adjusted for load duration factors, C_D, as shown, in accordance with the NDS, and are not permitted to be adjusted for other load durations.
3. Tabulated allowable loads given for different load directions cannot be combined.
4. The tabulated F_1 and F_2 allowable loads are for a single connector. The terminating member must be constrained against rotation for the F_1 load direction when the angle connectors are not used in pairs.
5. When angles are installed on each side of wood member, the minimum member thickness must be 3 inches.
6. The F_2 load direction is that which results in the terminating member bearing on the flange of the connector. Connectors are required on both sides of the terminating member to resist allowable F_2 loads in both directions.

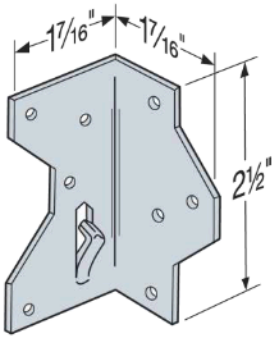

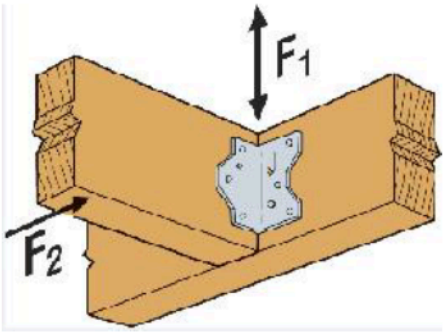

A34

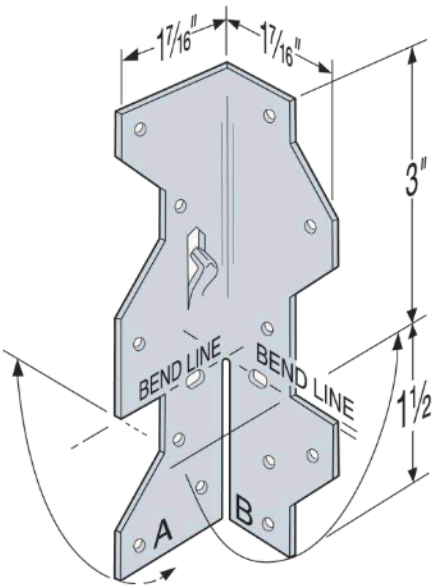

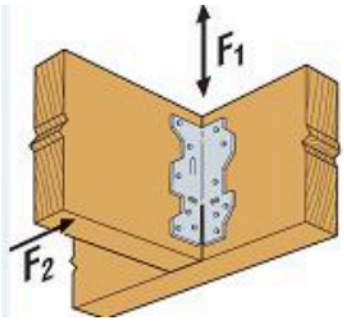

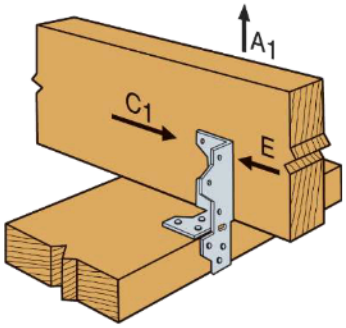

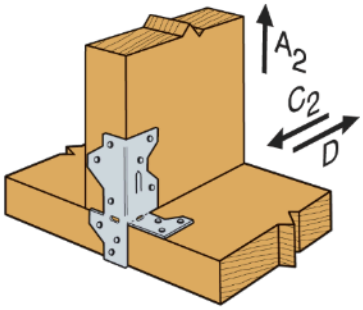

A35

FIGURE 5—A ANGLES

TABLE 6—LTP4 FRAMING CONNECTOR

MODEL NO.	FASTENERS (Quantity-Type)		DIRECTION OF LOAD	ALLOWABLE LOADS (lbs)[1,2]			
	Plates	Rim Joist/Blocking		C_D=1.0	C_D=1.15	C_D=1.25	C_D=1.6
LTP4	6 – SD9112	6 – SD9112	G	910	910	910	910
	6 – SD9112	6 – SD9112	H	800	800	800	800

For **SI:** 1 inch = 25.4 mm, 1 lbf = 4.45 N.

1. Tabulated allowable loads have been adjusted for load duration factors, C_D, as shown, in accordance with the NDS, and are not permitted to be adjusted for other load durations.
2. The LTP4 nay be installed over wood-based structural sheathing (as shown in Figure 6) having a maximum thickness of $^1/_2$ inch without adversely affecting the tabulated loads.

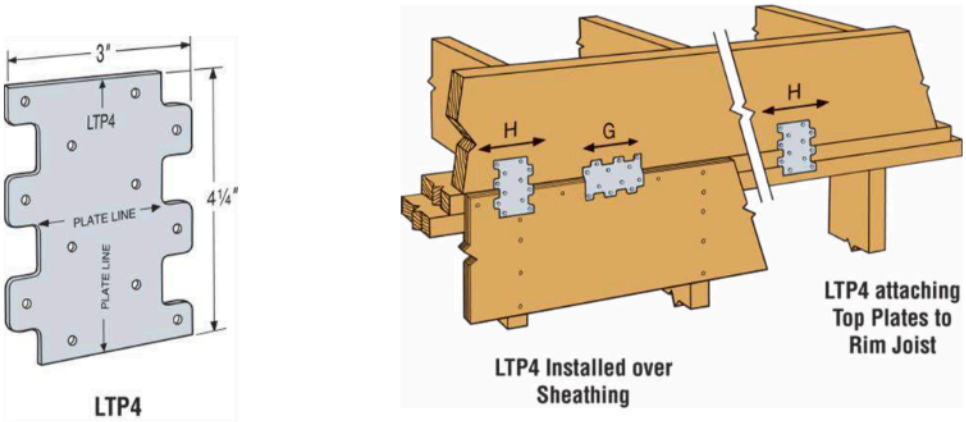

FIGURE 6—LTP4 FRAMING CONNECTOR

TABLE 7—DJTZ DECK JOIST TIE

MODEL NO.	FASTENERS (Quantity-Type)	ALLOWABLE DOWN LOADS (lbs)		
		SCREWS		
	SCREWS	C_D=1.0	C_D=1.15	C_D=1.25
DJT14Z	8-SD10212	1,250	1,460	1,490

For **SI:** 1 inch = 25.4 mm, 1 lbf = 4.45 N.

1. Tabulated allowable loads have been adjusted for load duration factors, C_D, as shown, in accordance with the NDS, and are not permitted to be adjusted for other load durations.
2. The tabulated allowable loads are for a single connector.

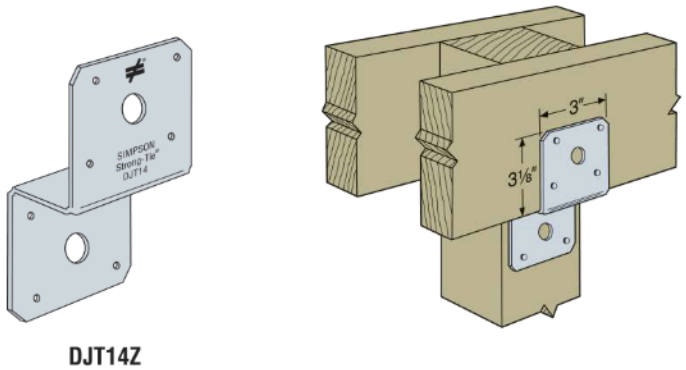

FIGURE 7—DJTZ DECK JOIST TIE

TABLE 8—H-SERIES SEISMIC AND HURRICANE TIES

MODEL NO.	FASTENERS (Quantity-Type)		ALLOWABLE LOADS (lbs)[1,2,3,4,5]		
			UPLIFT (C_D=1.6)	LATERAL (C_D=1.6)	
	TO RAFTER	TO PLATES		F_1	F_2
H1	6-SD9112	4- SD9112	505	600	390
H2.5	5-SD9112	5-SD9112	480	305	165
H2.5A	5-SD9112	5-SD9112	625	450	110
H4	4-SD9112	4-SD9112	325 [6]	200	135
H5	4-SD9112	4-SD9112	480	565	235
H8	5-SD9112	5-SD9112	820 [7]	85	-
H10	8-SD9112	8-SD9112	1135	840	325

For **SI:** 1 inch = 25.4 mm, 1 lbf = 4.45 N.

1. Tabulated allowable loads have been adjusted for a load duration factor, C_D, of 1.6, corresponding to a ten-minute load duration (i.e., wind or earthquake loading), in accordance with the NDS. The allowable loads do not apply to loads of other durations.
2. Allowable loads are for one anchor. A minimum rafter thickness of $2^1/_2$ inches must be used when framing anchors are installed on each side of the joist and on the same side of the plate.
3. Allowable lateral loads in the F_1 direction (parallel to the plate) must not be used to replace diaphragm boundary members or nailing, or replace solid blocking required by code to laterally support the ends of joists or rafters.
4. When cross-grain bending or cross-grain tension cannot be avoided, mechanical reinforcement to all such forces must be provided where required.
5. Tabulated allowable loads given for different load directions cannot be simultaneously combined, i.e., the tie must be subjected to only one direction of load for each loading condition.
6. Maximum allowable uplift load for the H4 stud bottom plate installation is 415 lbs.
7. Maximum allowable uplift load for the H8 stud bottom plate installation is 380 lbs.

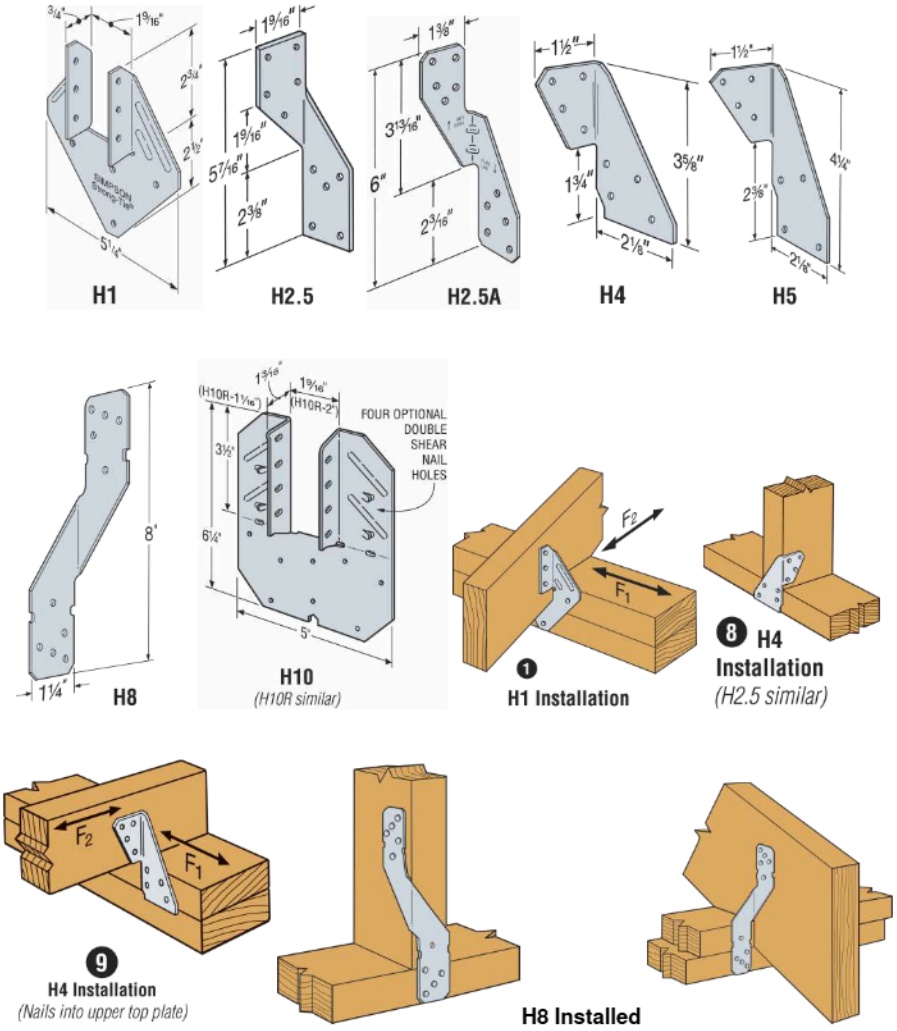

FIGURE 8—H-SERIES SEISMIC AND HURRICANE TIES

TABLE 9—RSP STUD PLATE TIE

MODEL NO.	DIMENSIONS (in)		FASTENERS (Quantity-Type)		ALLOWABLE UPLIFT LOADS (lbs)	ALLOWABLE LOADS (lbs)[1,2,3]	
						F_1	F_2
	W	L	STUD	PLATE	C_D=1.6	C_D=1.6	C_D=1.6
RSP4(1)	$2^1/_8$	$4^1/_2$	4-SD9112	4-SD9112	520	205	190
RSP4(2)			4-SD9112	4-SD9112	520	275	255

For **SI:** 1 inch = 25.4 mm, 1 lbf = 4.45 N.

1. Tabulated allowable loads have been adjusted for a load duration factor, C_D, of 1.6, corresponding to a ten-minute load duration (i.e., wind or earthquake loading), in accordance with the NDS. The allowable loads do not apply to loads of other durations.
2. F_1 and F_2 loads cannot be combined.
3. The F_1 load direction is parallel to the plate, and the F_2 load direction is perpendicular to the plate.

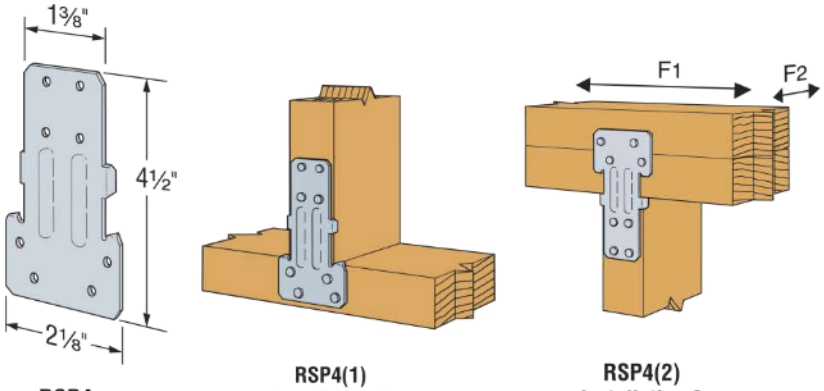

RSP4 RSP4(1) Installation 1 RSP4(2) Installation 2

U.S. Patent 5,697,725

FIGURE 9—RSP STUD PLATE TIES

TABLE 10—AC SERIES POST CAPS

MODEL NO. [1]	DIMENSIONS (in)		FASTENERS (Quantity-Type)		ALLOWABLE LOADS [2,3,4,5,6]	
					Uplift	Lateral
	W	L	Beam	Post	C_D=1.6	C_D=1.6
AC4 MAX	$3^9/_{16}$	$6^1/_2$	14 – SD10112	14 – SD10112	2,740	1,485
AC4R MAX	4	7	14 – SD10112	14 – SD10112	2,740	1,485
AC6 MAX	$5^1/_2$	$8^1/_2$	14 – SD10112	14 – SD10112	2,920	2,125
AC6R MAX	6	9	14 – SD10112	14 – SD10112	2,920	2,125

For **SI:** 1 inch = 25.4 mm, 1 lbf = 4.45 N.

1. "MAX" suffix to the model number indicates that both round and triangular holes must be filled with the quantity of screws specified.
2. Tabulated allowable loads have been adjusted for a load duration factor, C_D, of 1.6, corresponding to a ten-minute load duration (i.e., wind or earthquake loading), in accordance with the NDS. The allowable loads do not apply to loads of other durations.
3. Tabulated allowable loads are for a pair of connectors, with one connector installed on each side of the beam.
4. Tabulated allowable loads apply only to cases in which the beam is continuous through the connector.
5. Tabulated uplift and lateral loads cannot be combined.
6. Allowable lateral loads are for loads applied parallel to the length of the beam.

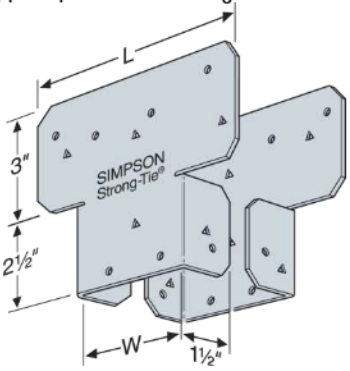

FIGURE 10—AC SERIES

TABLE 11—LCE4 POST CAP

MODEL NO.	FASTENERS (Quantity-Type)		ALLOWABLE LOADS (lbs)[1,2,3]	
			Uplift	Lateral [4]
	Beam	Post	C_D=1.6	C_D=1.6
LCE4	14-SD10112	10-SD10112	1,860	1,355

For **SI:** 1 inch = 25.4 mm, 1 lbf = 4.45 N.

1. Tabulated allowable loads have been adjusted for a load duration factor, C_D, of 1.6, corresponding to a ten-minute load duration (i.e., wind or earthquake loading), in accordance with the NDS. The allowable loads do not apply to loads of other durations.
2. Tabulated allowable loads are for a pair of connectors, with one connector installed on each side of the beam.
3. Tabulated uplift and lateral loads cannot be combined.
4. Allowable lateral loads are for loads applied parallel to the length of the beam.

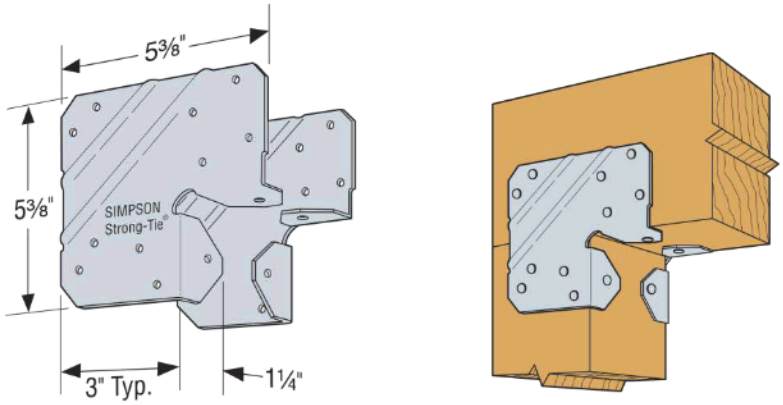

FIGURE 11—LCE4 POST CAP

TABLE 12—BC AND BCS SERIES POST CAPS[1]

MODEL NO.	DIMENSIONS (in)						FASTENERS (Quantity-Type)		ALLOWABLE LOADS[2,3,4] (lbs)	
	W_1	W_2	L_1	L_2	H_1	H_2	Beam Flange	Post Flange	Uplift	Lateral [5]
									C_D=1.6	C_D=1.6
BC4	$3^9/_{16}$	$3^9/_{16}$	$2^7/_8$	$2^7/_8$	3	3	6-SD10112	6-SD10112	705	1,075
BCS2-2/4[6,7]	$3^1/_8$	$3^9/_{16}$	$2^7/_8$	$2^7/_8$	$2^{15}/_{16}$	$2^{15}/_{16}$	8-SD9212	6-SD9212	840	1,115

For **SI:** 1 inch = 25.4 mm, 1 lbf = 4.45 N.

1. The BC and BCS post caps must be used with wood beams having a width less than or equal to the width of the supporting post.
2. Tabulated allowable loads have been adjusted for a load duration factor, C_D, of 1.6, corresponding to a ten-minute load duration (i.e., wind or earthquake loading), in accordance with the NDS. The allowable loads do not apply to loads of other durations.
3. Tabulated allowable loads apply only to cases in which the beam is continuous through the connector.
4. Tabulated uplift and lateral loads cannot be combined.
5. Allowable lateral loads are for loads applied parallel to the length of the beam.
6. The BCS2-2/4 post cap is designed for the connection of double 2x's to a nominally 4-inch-wide post.
7. The BCS has slanted fastener holes for screws that must be installed into the beam at a 45-degree angle and penetrate into the end grain of the supporting post.

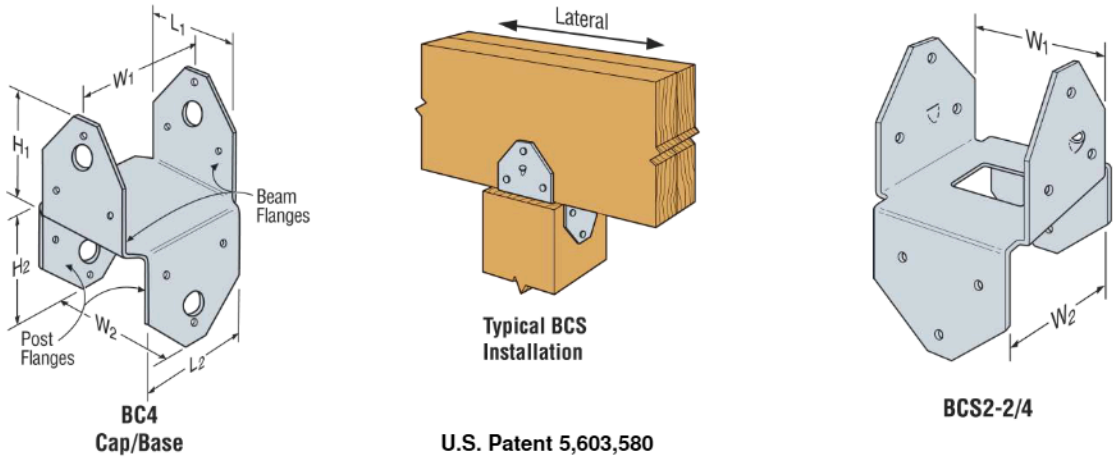

FIGURE 12—BC AND BCS SERIES

TABLE 13—BCO SERIES POST BASES

MODEL NO.	NOMINAL POST SIZE	FASTENERS (Quantity-Type)		Allowable Uplift Loads[1,2] (lbs) (C_D=1.6)	
		Post Flange	Base Bottom	Uplift	Lateral [3]
BC40	4x	6-SD10112	4-SD10112	805	770
BC60	6x	6-SD10112	4-SD10112	680	920

For **SI:** 1 inch = 25.4 mm, 1 lbf = 4.45 N.

1. Tabulated allowable loads have been adjusted for a load duration factor, C_D, of 1.6, corresponding to a ten-minute load duration (i.e., wind or earthquake loading), in accordance with the NDS. The allowable loads do not apply to loads of other durations.
2. Tabulated uplift and lateral loads cannot be combined.
3. Allowable lateral loads are for loads applied perpendicular to the flanges of the connector.

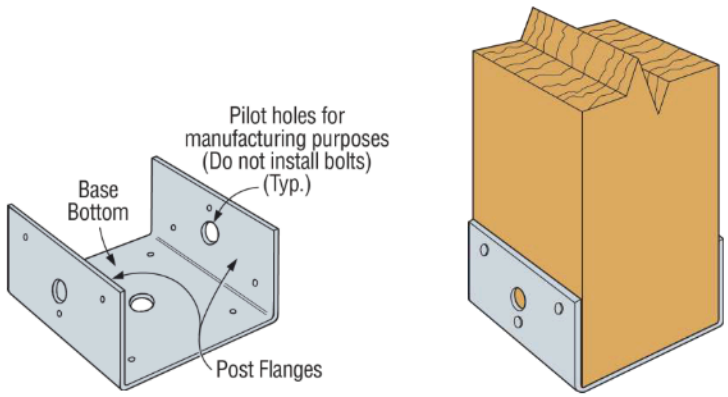

FIGURE 13—BCO SERIES

TABLE 14—LPC SERIES LIGHT POST CAP[1]

MODEL NO.	FASTENERS (Quantity-Type)		ALLOWABLE LOADS (lbs.)[2,3,4,5]	
			Uplift	Lateral [6]
	Beam	Post	C_D=1.6	C_D=1.6
LPC4Z	8-SD9112	8-SD9112	695	830

For **SI:** 1 inch = 25.4 mm, 1 lbf = 4.45 N.

1. The LPC post cap must be used with wood beams having a width less than or equal to the width of the supporting post.
2. Tabulated allowable loads have been adjusted for a load duration factor, C_D, of 1.6, corresponding to a ten-minute load duration (i.e., wind or earthquake loading), in accordance with the NDS. The allowable loads do not apply to loads of other durations.
3. Tabulated allowable loads are for a pair of connectors, with one connector installed on each side of the beam.
4. Tabulated allowable loads apply only to cases in which the beam is continuous through the connector.
5. Tabulated uplift and lateral loads cannot be combined.
6. Allowable lateral loads are for loads applied parallel to the length of the beam.

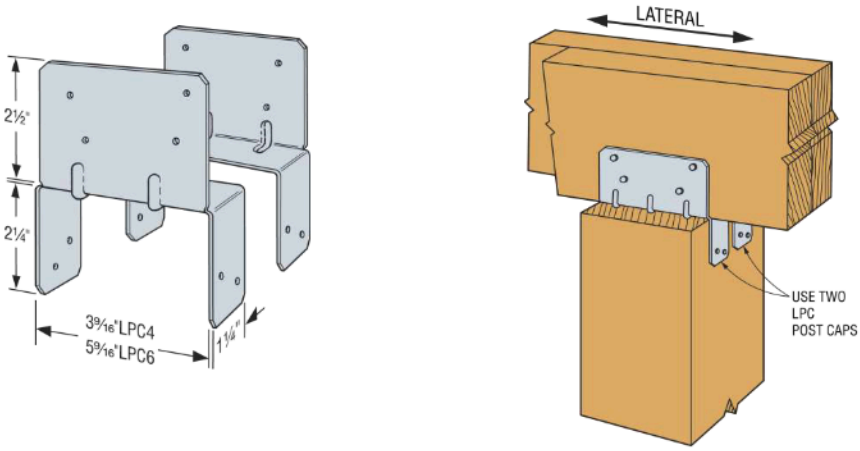

FIGURE 14—LPC SERIES

TABLE 15—PC AND EPC SERIES POST CAPS

MODEL NO.	POST SIZE	DIMENSIONS (in)					FASTENERS [1] (Quantity per Flange - Type)			ALLOWABLE LOADS[2,3,4] (lbs)			
							SURFACES			UPLIFT		LATERAL[5]	
		W1	W2	L1	L2	L3	Post Flange	Beam Flange PC	Beam Flange EPC	PC	EPC	PC	EPC
										C_D=1.6	C_D=1.6	C_D=1.6	C_D=1.6
PC44-16	4x4	$3^9/_{16}$	$3^9/_{16}$	$2^5/_8$	11	$7^3/_8$	4-SD10112	6-SD10112	4-SD10112	730	890	1,260	1,105
PC44	4x4	$3^9/_{16}$	$3^9/_{16}$	$2^5/_8$	11	$7^3/_8$	4-SD10112	6-SD10112	4-SD10112	1,930	1,150	1,600	1,785

For **SI:** 1 inch = 25.4 **mm**, 1 lbf = 4.45 N.

1. The tabulated fastener quantity is the number of screws required in each flange of the PC or EPC connector.
2. Tabulated allowable loads have been adjusted for a load duration factor, C_D, of 1.6, corresponding to a ten-minute load duration (i.e., wind or earthquake loading), in accordance with the NDS. The allowable loads do not apply to loads of other durations.
3. Tabulated allowable loads for the PC series post cap apply only to cases in which the beam is continuous through the connector.
4. Tabulated uplift and lateral loads cannot be combined.
5. Allowable lateral loads are for loads applied parallel to the length of the beam.

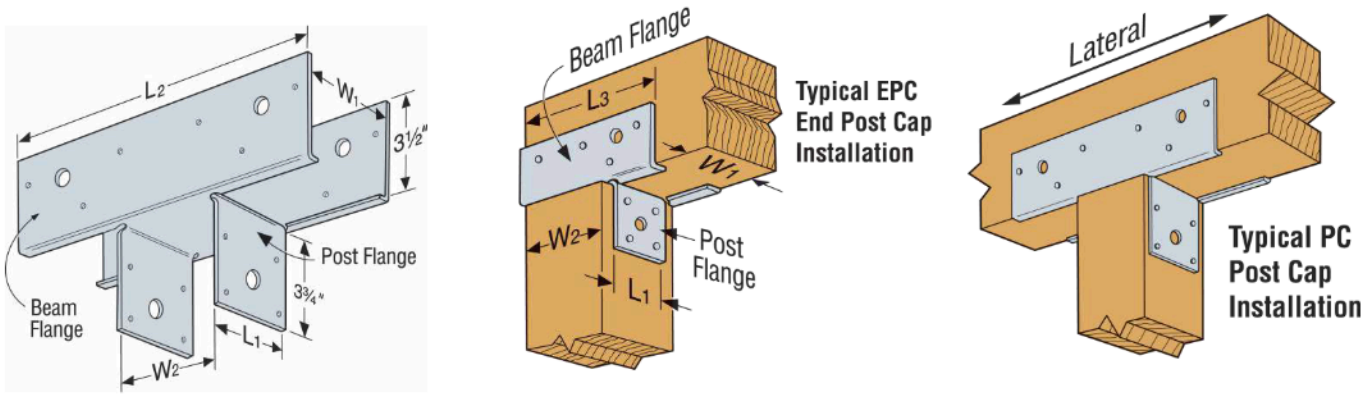

FIGURE 15—PC AND EPC SERIES

TABLE 16—ABA ADJUSTABLE POST BASE

MODEL NO.	DIMENSIONS (inches)			FASTENERS (Quantity-Size/Type)		ALLOWABLE LOADS (lbs) [1,2]	
	W	L	H	ANCHOR DIAMETER (inches)	POST	UPLIFT C_D=1.6	DOWNLOADS C_D=1.0, C_D=1.15, C_D=1.25
ABA44	$3^9/_{16}$	$3^1/_8$	$3^1/_{16}$	$^1/_2$	6-SD9112	610	6,000
ABA44R	$4^1/_{16}$	$3^1/_8$	$2^{13}/_{16}$	$^1/_2$	6-SD9112	610	8,000
ABA46	$3^9/_{16}$	$5^3/_{16}$	$3^1/_8$	$^5/_8$	8-SD10112	940	9,435
ABA46R	$4^1/_{16}$	$5^3/_{16}$	$2^7/_8$	$^5/_8$	8-SD10112	940	12,000
ABA66	$5^1/_2$	$5^1/_4$	$3^1/_8$	$^5/_8$	8-SD10112	970	10,665
ABA66R	6	$5^3/_{16}$	$2^7/_8$	$^5/_8$	8-SD10112	970	12,665

For **SI:** 1 **inch** = 25.4 mm, 1 lbf = 4.45 N.

1. Tabulated allowable loads have been adjusted for load duration factors, C_D, as shown, in accordance with the NDS, and are not permitted to be adjusted for other load durations.
2. Anchor bolts and concrete footings must be capable of resisting all loads and forces transferred from the post base connector.

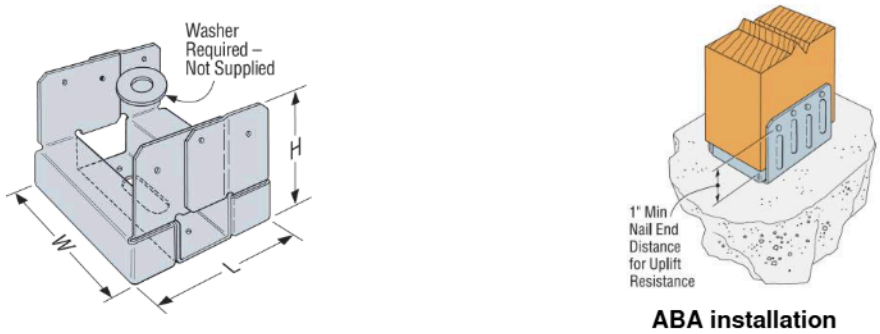

FIGURE 16—ABA ADJUSTABLE POST BASE

TABLE 17—ABU ADJUSTABLE POST BASE

MODEL NO.	DIMENSIONS (inches)			FASTENERS (Quantity-Type / Size)		ALLOWABLE LOADS[1,2] (lbs)	
	W	L	H	Post	Anchor Diameter (inches)	Uplift C_D=1.6	Download C_D=1.0, C_D=1.15, C_D=1.25
ABU44	$3^9/_{16}$	3	$5^1/_2$	12-SD10112	$^5/_8$	2,140	6,665

For **SI:** 1 inch = 25.4 mm, 1 lbf = 4.45 N.

1. Tabulated allowable loads have been adjusted for load duration factors, C_D, as shown, in accordance with the NDS, and are not permitted to be adjusted for other load durations.
2. Anchor bolts and concrete footings must be capable of resisting all loads and forces transferred from the post base connector.

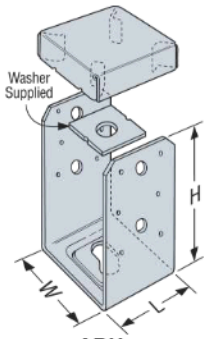

ABU44

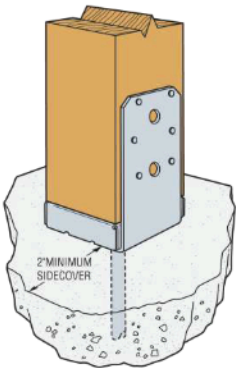

FIGURE 17—ABU44 POST BASE

TABLE 18—LU SERIES JOIST HANGERS

MODEL No.	DIMENSIONS (inches)			FASTENERS (Quantity-Type)		ALLOWABLE LOADS[1,2] (lbs)			
	W	H	B	Header	Joist	Uplift	Download		
						C_D=1.6	C_D=1.0	C_D=1.15	C_D=1.25
LU24	$1^9/_{16}$	$3^1/_8$	$1^1/_2$	4-SD9112	2-SD9112	340	685	725	725
LU26	$1^9/_{16}$	$4^3/_4$	$1^1/_2$	6-SD9112	4-SD9112	915	1,025	1,030	1,030
LU28	$1^9/_{16}$	$6^3/_8$	$1^1/_2$	8-SD9112	6-SD9112	995	1,370	1,380	1,380
LU210	$1^9/_{16}$	$7^{13}/_{16}$	$1^1/_2$	10-SD9112	6-SD9112	1,150	1,710	1,965	2,010

For **SI:** 1 inch = 25.4 mm, 1 lbf = 4.45 N.

1. Tabulated allowable loads have been adjusted for load duration factors, C_D, as shown, in accordance with the NDS, and are not permitted to be adjusted for other load durations.
2. LU series hangers provide torsional resistance, which is defined as a moment of not less than 75 pounds times the depth of the joist at which the lateral movement of the top or bottom of the joist with respect to its vertical position is 0.125 inch (3.2 mm). The height, H, of the joist hanger must be at least 60 percent of the height of the joist unless additional lateral restraint is provided, as designed by others.

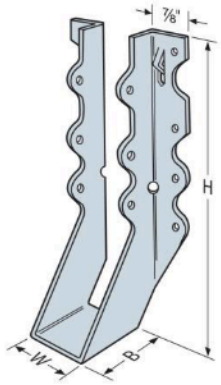

FIGURE 18—LU JOIST HANGER

TABLE 19—LUCZ SERIES JOIST HANGERS

MODEL No.	DIMENSIONS (inches)		FASTENERS (Quantity-Type)		ALLOWABLE LOADS[1,2] (lbs)			
					Uplift	Download		
	W	H	Header	Joist	C_D=1.6	C_D=1.0	C_D=1.15	C_D=1.25
LUC26Z	$1^9/_{16}$	$4^3/_4$	6-SD9112	4-SD9112	865	1,025	1,180	1,285
			6-SD10112	4-SD10112	915	1,040	1,195	1,300
LUC210Z	$1^9/_{16}$	$7^3/_4$	10-SD9112	6-SD9112	1,605	1,710	1,965	2,030
			10-SD10112	6-SD10112	1,580	1,730	1,990	2,165

For **SI:** 1 inch = 25.4 mm, 1 lbf = 4.45 N.

1. Tabulated allowable loads have been adjusted for load duration factors, C_D, as shown, in accordance with the NDS, and are not permitted to be adjusted for other load durations.
2. LUCZ series hangers provide torsional resistance, which is defined as a moment of not less than 75 pounds times the depth of the joist at which the lateral movement of the top or bottom of the joist with respect to its vertical position is 0.125 inch (3.2 mm). The height, H, of the joist hanger must be at least 60 percent of the height of the joist unless additional lateral restraint is provided, as designed by others.

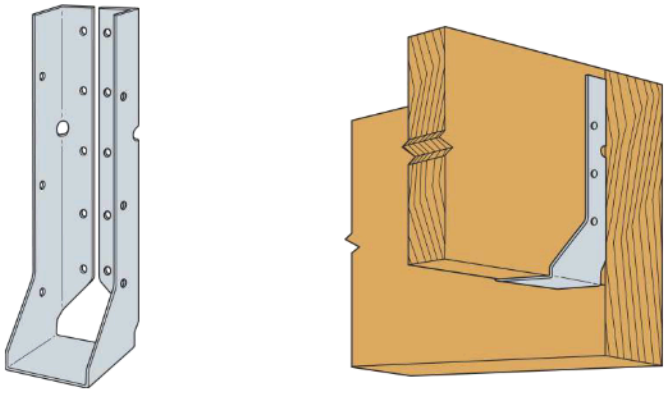

FIGURE 19—LUCZ SERIES HANGER

TABLE 20—LUS SERIES JOIST HANGERS[1]

MODEL NO.	DIMENSIONS (inches)			FASTENERS (Quantity-Type)		ALLOWABLE LOADS[2,3] (lbs)			
						Uplift	Download		
	W	H	B	Header	Joist[4]	C_D=1.6	C_D=1.0	C_D=1.15	C_D=1.25
LUS24	1 9/16	3 1/8	1 3/4	4-SD9212	2-SD9212	490	895	895	895
				4-SD9112	2-SD9212	490	840	895	895
LUS26	1 9/16	4 3/4	1 3/4	4-SD9212	4-SD9212	1,180	1,110	1,270	1,385
				4-SD9112	4-SD9212	1,180	990	1,140	1,240
LUS28	1 9/16	6 5/8	1 3/4	6-SD9212	4-SD9212	1,310	1,510	1,610	1,610
				6-SD9112	4-SD9212	1,310	1,335	1,530	1,610
LUS210	1 9/16	7 13/16	1 3/4	8-SD9212	4-SD9212	1,240	1,910	2,125	2,125
				8-SD9112	4-SD9212	1,240	1,675	1,925	2,095
LUS24-2	3 1/8	3 1/8	2	4-SD10212	2-SD10212	530	1,035	1,190	1,295
				4-SD10112	2-SD10212	530	860	990	1,075
LUS26-2	3 1/8	4 7/8	2	4-SD10212	4-SD10212	1,075	1,205	1,385	1,505
				4-SD10112	4-SD10212	1,075	1,030	1,185	1,285
LUS28-2	3 1/8	7	2	6-SD10212	4-SD10212	1,200	1,640	1,885	2,050
				6-SD10112	4-SD10212	1,200	1,375	1,580	1,720
LUS210-2	3 1/8	9	2	8-SD10212	6-SD10212	1,800	2,240	2,580	2,800
				8-SD10112	6-SD10212	1,800	1,890	2,175	2,360

For **SI:** 1 inch = 25.4 mm, 1 lbf = 4.45 N.

1. The LUS24, LUS26, LUS28 and LUS210 are designed for use with nominal 2x lumber. The suffix "-2" to certain model numbers designates that these hangers are designed for built-up joists consisting of two nominal 2x members.
2. Tabulated allowable loads have been adjusted for load duration factors, C_D, as shown, in accordance with the NDS, and are not permitted to be adjusted for other load durations.
3. LUS series hangers provide torsional resistance, which is defined as a moment of not less than 75 pounds times the depth of the joist at which the lateral movement of the top or bottom of the joist with respect to its vertical position is 0.125 inch (3.2 mm). The height, H, of the joist hanger must be at least 60 percent of the height of the joist unless additional lateral restraint is provided, as designed by others.
4. Joist screws must be installed at a 45-degree angle through the joist and into the header/beam to achieve the tabulated loads.

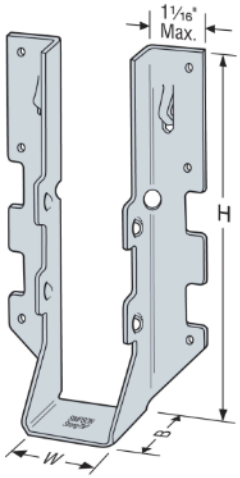

FIGURE 20—LUS HANGER

TABLE 21—HUS SERIES JOIST HANGERS

MODEL NO.	DIMENSIONS (inches)			FASTENERS (Quantity-Type)		ALLOWABLE LOADS[1,2] (lbs)			
						Uplift	Download		
	W	H	B	Header	Joist[3]	C_D = 1.6	C_D=1.0	C_D=1.15	C_D=1.25
HUS26	$1^5/_8$	$5^3/_8$	3	14-SD10212	6-SD10212	1,100	3,040	3,125	3,125
HUS28	$1^5/_8$	7	3	22-SD10212	8-SD10212	2,135	3,880	3,880	3,880

For **SI:** 1 inch = 25.4 mm, 1 lbf = 4.45 N.

1. Tabulated allowable loads have been adjusted for load duration factors, C_D, as shown, in accordance with the NDS, and are not permitted to be adjusted for other load durations.
2. LUS series hangers provide torsional resistance, which is defined as a moment of not less than 75 pounds times the depth of the joist at which the lateral movement of the top or bottom of the joist with respect to its vertical position is 0.125 inch (3.2 mm). The height, H, of the joist hanger must be at least 60 percent of the height of the joist unless additional lateral restraint is provided, as designed by others.
3. Joist screws must be installed at a 45-degree angle through the joist and into the header/beam to achieve the tabulated loads.

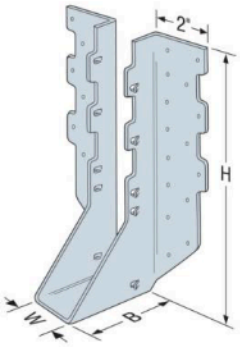

FIGURE 21—HUS HANGER

TABLE 22—ALLOWABLE LOADS FOR THE RR RIDGE RAFTER CONNECTOR

MODEL NO.	FASTENERS (Quantity – Size)		ALLOWABLE LOADS (lbs)			
			Uplift	Download		
	Header	Joist	C_D = 1.6	C_D = 1.0	C_D = 1.15	C_D = 1.25
RR	4 – SD9112	4 – SD9112	205	475	475	475

For **SI:** 1 inch = 25.4 mm, 1 lbf = 4.45 N.

1. Tabulated allowable loads have been adjusted for load duration factors, C_D, as shown, in accordance with the NDS, and are not permitted to be adjusted for other load durations.
2. RR series hangers provide torsional resistance, which is defined as a moment of not less than 75 pounds times the depth of the joist at which the lateral movement of the top or bottom of the joist with respect to its vertical position is 0.125 inch (3.2 mm). The height, H, of the joist hanger must be at least 60 percent of the height of the joist unless additional lateral restraint is provided, as designed by others.

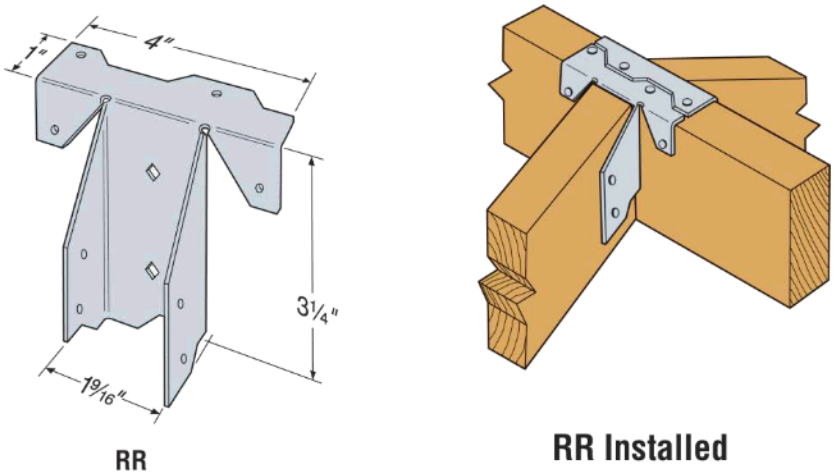

FIGURE 22—RR CONNECTOR

TABLE 23—ALLOWABLE LOADS FOR MTS TWIST STRAPS

MODEL NO.	LENGTH (in)	FASTENERS[1,3] (Quantity-Type)	ALLOWABLE UPLIFT LOADS[2] (lbs)
			C_D=1.6
MTS12	12	14-SD9112	870
MTS16	16	14-SD9112	870
MTS20	20	14-SD9112	940

For **SI:** 1 inch = 25.4 mm, 1 lbf = 4.45 N.

1. Half of the fasteners must be installed into each member to achieve the tabulated allowable uplift loads.
2. Tabulated allowable loads have been adjusted for a load duration factor, C_D, of 1.6, corresponding to a ten-minute load duration (i.e., wind or earthquake loading), in accordance with the NDS. The allowable loads do not apply to loads of other durations.
3. The MTS twist straps have more fastener holes than the minimum quantity of screws specified in the table.

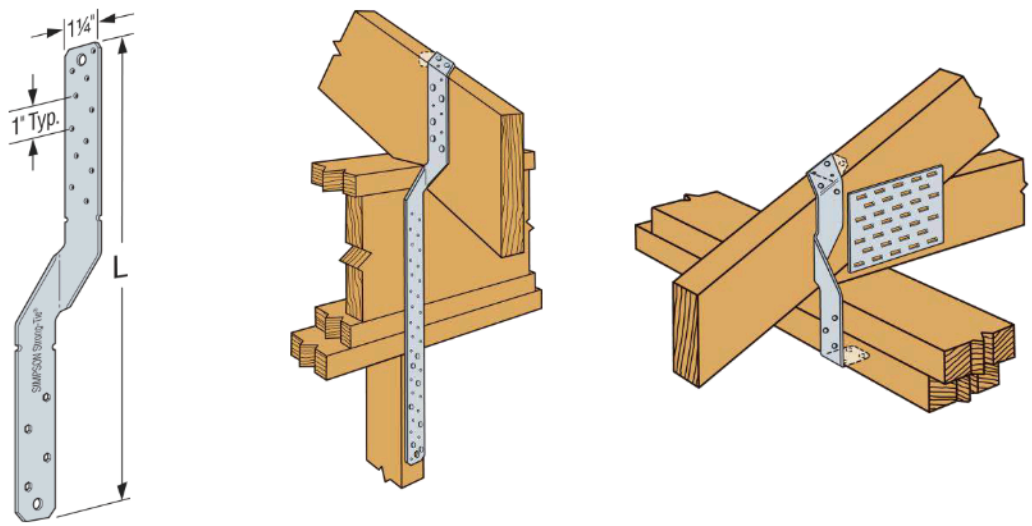

FIGURE 23—MTS TWIST STRAP AND TYPICAL INSTALLATIONS

TABLE 24—ALLOWABLE LOADS FOR ST STRAPS

MODEL SERIES	MODEL NO.	THE STRAP PROPERTIES				FASTENERS (Total Quantity-Type)	ALLOWABLE TENSION LOADS (lbs)
		Thickness (Gage No.)	Length (in.)	Min. F_y (ksi)	Min. F_u (ksi)		C_D=1.6
ST	ST292	20	$9^5/_{16}$	33	45	12-SD10112	1,215
	ST2122	20	$12^{13}/_{16}$	40	55	12-SD10112	1,480
	ST2115	20	$16^5/_{16}$	50	65	6-SD10112	660
	ST2215	20	$16^5/_{16}$	50	65	14-SD10112	1,750
	ST6215	16	$16^5/_{16}$	33	45	16-SD10112	2,010
	ST6224	16	$23^5/_{16}$	40	55	20-SD10112	2,460
	ST6236	14	$33^{13}/_{16}$	50	65	28-SD10112	3,590
	ST9	16	9	33	45	8-SD10112	1,105
	ST12	16	$11^5/_8$	33	45	10-SD10112	1,385
	ST18	16	$17^3/_4$	33	45	12-SD10112	1,420
	ST22	16	$21^5/_8$	33	45	20-SD10112	1,420

For **SI:** 1 inch = 25.4 mm, 1 lbf = 4.45 N, 1 ksi = 6.895 MPa.

1. Half of the fasteners must be installed into each member to achieve the tabulated allowable uplift loads.
2. Tabulated allowable loads have been adjusted for a load duration factor, C_D, of 1.6, corresponding to a ten-minute load duration (i.e., wind or earthquake loading), in accordance with the NDS. The allowable loads do not apply to loads of other durations.

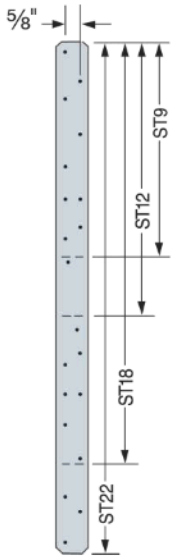

FIGURE 24—ST STRAPS

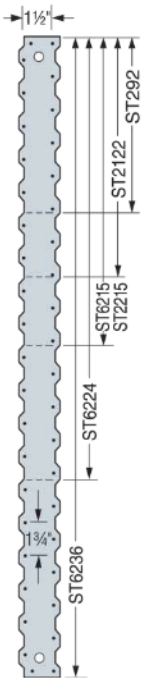

FIGURE 25—ST STRAPS

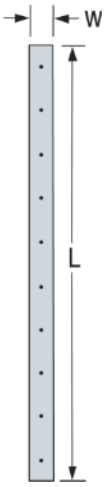

FIGURE 26—ST2115

TABLE 25—MST STRAPS

MODEL SERIES	MODEL NO.	THE STRAP PROPERTIES				FASTENERS[1] (Quantity-Type)	ALLOWABLE TENSION LOADS [2] (lbs)
		Thick. (Gage No.)	Length (in.)	Min. F_y (ksi)	Min. F_u (ksi)	Screws	C_D =1.6
MST	MST27	12	27	40	55	30-SD10112	4,150
	MST37	12	37½	40	55	40-SD10112	5,070

For **SI:** 1 inch = 25.4 mm, 1 lbf = 4.45 N, 1 ksi = 6.895 MPa.

1. Half of the fasteners must be installed into each member to achieve the tabulated allowable uplift loads.
2. Tabulated allowable loads have been adjusted for a load duration factor, C_D, of 1.6, corresponding to a ten-minute load duration (i.e., wind or earthquake loading), in accordance with the NDS. The allowable loads do not apply to loads of other durations.

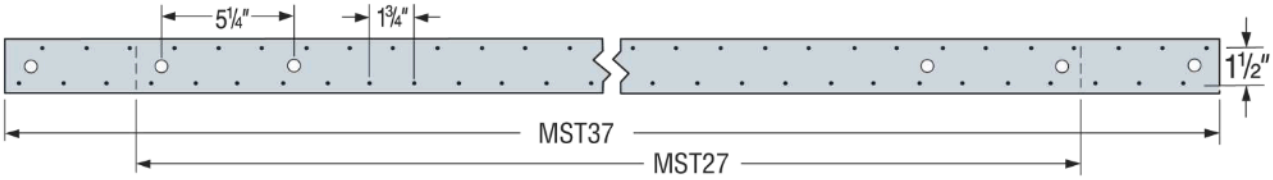

FIGURE 27—MST STRAPS

TABLE 26—LSTA, MSTA, LSTI, AND MSTI SERIES TIE STRAPS[1]

MODEL SERIES	MODEL NO.	THE STRAP PROPERTIES				FASTENERS[2] (Total Quantity-Type)	ALLOWABLE TENSION LOADS[3] (lbs)
		Thickness (Gage No.)	Length (in.)	Min. F_y (ksi)	Min. F_u (ksi)		C_D =1.6
LSTA	LSTA9	20	9	50	65	8-SD9112	1,095
	LSTA12	20	12	50	65	10-SD9112	1,235
	LSTA15	20	15	50	65	12-SD9112	1,235
	LSTA18	20	18	50	65	14-SD9112	1,235
	LSTA21	20	21	50	65	14-SD9112	1,235
	LSTA24	20	24	50	65	14-SD9112	1,235
	LSTA30	18	30	50	65	14-SD9112	1,640
	LSTA36	18	36	50	65	14-SD9112	1,415
MSTA	MSTA9	18	9	50	65	8-SD9112	1,095
	MSTA12	18	12	50	65	10-SD9112	1,370
	MSTA15	18	15	50	65	12-SD9112	1,640
	MSTA18	18	18	50	65	14-SD9112	1,640
	MSTA21	18	21	50	65	14-SD9112	1,640
	MSTA24	18	24	50	65	14-SD9112	1,640
	MSTA30	16	30	50	65	16-SD9112	2,050
	MSTA36	16	36	50	65	16-SD9112	1,970
	MSTA49	16	49	50	65	16-SD9112	2,050
LSTI	LSTI49	18	49	40	55	32-SD9112	4,205
	LSTI73	18	73	40	55	32-SD9112	4,205
MSTI	MSTI26	12	26	40	55	26-SD9112	3,555
	MSTI36	12	36	40	55	36-SD9112	4,925
	MSTI48	12	48	40	55	38-SD9112	5,070
	MSTI60	12	60	40	55	38-SD9112	5,070
	MSTI72	12	72	40	55	60-SD9112	5,070
MSTC	MSTC28	16	$28^1/_4$	50	65	36-SD9112	4,735
	MSTC40	16	$40^1/_4$	50	65	46-SD9112	4,735
	MSTC52	16	$52^1/_4$	50	65	42-SD9112	4,735
	MSTC66	14	$65^3/_4$	50	65	44-SD9112	5,850
	MSTC78	14	$77^3/_4$	50	65	44-SD9112	5,850

For **SI:** 1 inch = 25.4 mm, 1 lbf = 4.45 N, 1 ksi = 6.895 MPa.

1. Refer to Figures 28, 29, 30 and 31 (following page) for diagrams depicting the LSTA/MSTA, LSTI, MSTI and MSTC straps, respectively.
2. Half of the fasteners must be installed into each member to achieve the tabulated allowable uplift loads.
3. Tabulated allowable loads have been adjusted for a load duration factor, C_D, of 1.6, corresponding to a ten-minute load duration (i.e., wind or earthquake loading), in accordance with the NDS. The allowable loads do not apply to loads of other durations.

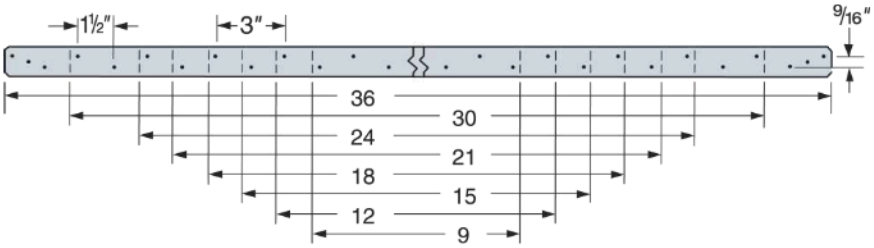

FIGURE 28—LSTA/MSTA STRAPS

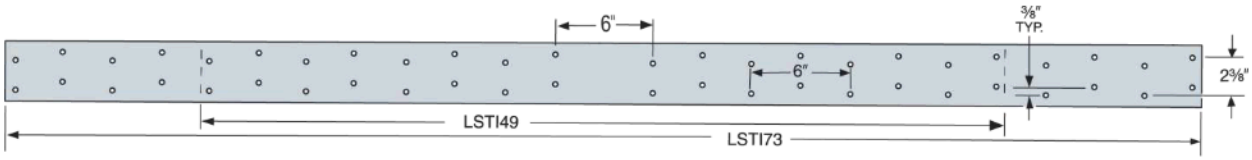

FIGURE 29—LSTI STRAPS

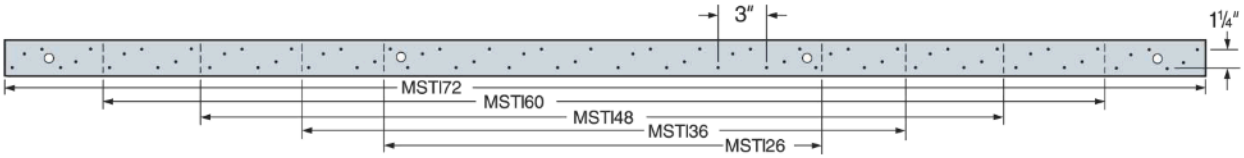

FIGURE 30—MSTI STRAPS

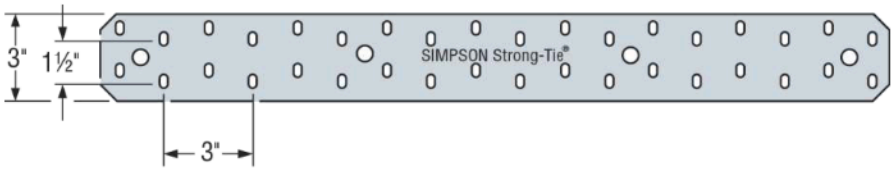

FIGURE 31—MSTC28, OTHER MODELS SIMILAR

TABLE 27—HTP37Z TIE STRAP

MODEL SERIES	MODEL NO.	THE STRAP PROPERTIES				FASTENERS (Total Quantity-Type)	ALLOWABLE TENSION LOADS (lbs)
		Thickness (Gage No.)	Length (in.)	Min. F_y (ksi)	Min. F_u (ksi)		C_D=1.6
HTP	HTP37Z	16	7	33	45	20-SD9112	2,735
HRS	HRS6	12	6	33	45	6-SD9112	820
	HRS8	12	8	33	45	10-SD9112	1,370
	HRS12	12	12	33	45	14-SD9112	1,915

For **SI:** 1 inch = 25.4 mm, 1 lbf = 4.45 N, 1 ksi = 6.895 MPa.

1. Half of the fasteners must be installed into each member to achieve the tabulated allowable uplift loads.
2. Tabulated allowable loads have been adjusted for a load duration factor, C_D, of 1.6, corresponding to a ten-minute load duration (i.e., wind or earthquake loading), in accordance with the NDS. The allowable loads do not apply to loads of other durations.

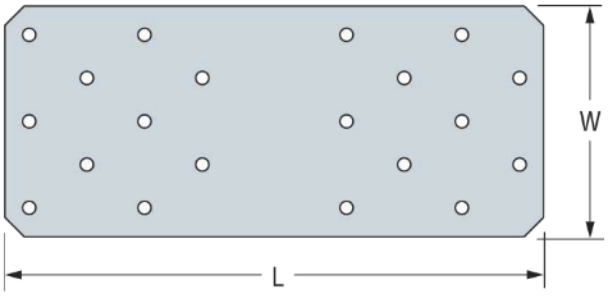

FIGURE 32—HTP37Z STRAP

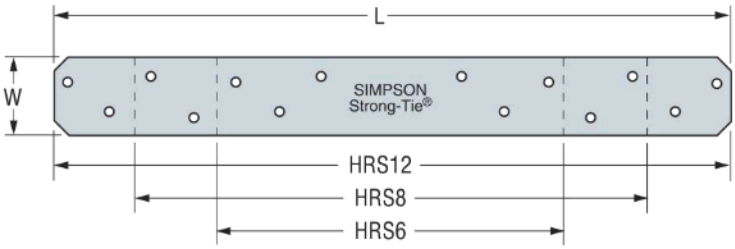

FIGURE 33—HRS STRAP

TABLE 28—STEEL SPECIFICATIONS, GRADES, MINIMUM TENSILE AND YIELD STRENGTHS, AND BASE METAL THICKNESS

MODEL	GAGE NO.	SPECIFICATION	F_y (ksi)	F_u (ksi)	BASE METAL THICKNESS (in.)
A21	18	A-653 SS GR 33	33	45	0.0445
A23	18	A-653 SS GR 33	33	45	0.0445
A33	12	A-653 SS GR 33	33	45	0.0975
A44	12	A-653 SS GR 33	33	45	0.0975
GA Series	18	A-653 SS GR 33	33	45	0.0445
L Series	16	A-653 SS GR 33	33	45	0.0555
A34	18	A-653 SS GR 33	33	45	0.0445
A35	18	A-653 SS GR 33	33	45	0.0445
LTP4	20	A-653 SS GR 33	33	45	0.0335
DJT14Z	14	A-653 SS GR 33	33	45	0.0685
H1	18	A-653 SS GR 33	33	45	0.0445
H2.5	18	A-653 SS GR 33	33	45	0.0445
H2.5A	18	A-653 SS GR 40	40	55	0.0445
H4	20	A-653 SS GR 33	33	45	0.0335
H5	18	A-653 SS GR 33	33	45	0.0445
H8	18	A-653 SS GR 40	40	55	0.0445
H10	18	A-653 SS GR 33	33	45	0.0445
RSP4	20	A-653 SS GR 33	33	45	0.0335
AC Series	18	A-653 SS GR 33	33	45	0.0445
LCE4	20	A-653 SS GR 40	40	55	0.0335
BC4	18	A-653 SS GR 33	33	45	0.0445
BCS2-2/4	18	A-653 SS GR 33	33	45	0.0445
BCO Series	18	A-653 SS GR 33	33	45	0.0445
LPC4Z	18	A-653 SS GR 33	33	45	0.0445
PC44-16	16	A-653 SS GR 33	33	45	0.0555
PC44	12	A-653 SS GR 33	33	45	0.0975
EPC44-16	16	A-653 SS GR 33	33	45	0.0555
EPC44	12	A-653 SS GR 33	33	45	0.0975
ABA44/44R	16	A-653 SS GR 33	33	45	0.0555
ABA Series	14	A-653 SS GR 33	33	45	0.0685
ABU44 Base	12	A-653 SS GR 33	33	45	0.0975
ABU44 Plate	7	A-653 SS GR 33	33	45	0.1715
LU Single Series	20	A-653 SS GR 33	33	45	0.0335
LUCZ Series	18	A-653 SS GR 33	33	45	0.0445
LUS Series	18	A-653 SS GR 33	33	45	0.0445
HUS Series	16	A-653 SS GR 33	33	45	0.0555
RR	18	A-653 SS GR 33	33	45	0.0445
MTS Series	16	A-653 SS GR 33	33	45	0.0555
ST292	20	A-653 SS GR 33	33	45	0.0335
ST2122	20	A-653 SS GR 40	40	55	0.0335
ST2115	20	A-653 SS GR 50 CL1	50	65	0.0335
ST2215	20	A-653 SS GR 50 CL1	50	65	0.0335
ST6215	16	A-653 SS GR 33	33	45	0.0555
ST6224	16	A-653 SS GR 40	40	55	0.0555
ST6236	14	A-653 SS GR 50 CL1	50	65	0.0685
ST9	16	A-653 SS GR 33	33	45	0.0555
ST12	16	A-653 SS GR 33	33	45	0.0555
ST18	16	A-653 SS GR 33	33	45	0.0555
ST22	16	A-653 SS GR 33	33	45	0.0555
MST27	12	A-653 SS GR 40	40	55	0.0975
MST37	12	A-653 SS GR 40	40	55	0.0975

For **SI:** 1 inch = 25.4 mm, 1 ksi = 6.895 MPa.

TABLE 28 (CONTINUED)—STEEL SPECIFICATIONS, GRADES, MINIMUM TENSILE AND YIELD STRENGTHS, AND BASE METAL THICKNESS

MODEL	GAGE NO.	SPECIFICATION	F_y (ksi)	F_u (ksi)	BASE METAL THICKNESS (in.)
LSTA9	20	A-653 SS GR 50 CL1	50	65	0.0335
LSTA12	20	A-653 SS GR 50 CL1	50	65	0.0335
LSTA15	20	A-653 SS GR 50 CL1	50	65	0.0335
LSTA18	20	A-653 SS GR 50 CL1	50	65	0.0335
LSTA21	20	A-653 SS GR 50 CL1	50	65	0.0335
LSTA24	20	A-653 SS GR 50 CL1	50	65	0.0335
LSTA30	18	A-653 SS GR 50 CL1	50	65	0.0445
LSTA36	18	A-653 SS GR 50 CL1	50	65	0.0445
MSTA9	18	A-653 SS GR 50 CL1	50	65	0.0445
MSTA12	18	A-653 SS GR 50 CL1	50	65	0.0445
MSTA15	18	A-653 SS GR 50 CL1	50	65	0.0445
MSTA18	18	A-653 SS GR 50 CL1	50	65	0.0445
MSTA21	18	A-653 SS GR 50 CL1	50	65	0.0445
MSTA24	18	A-653 SS GR 50 CL1	50	65	0.0445
MSTA30	16	A-653 SS GR 50 CL1	50	65	0.0555
MSTA36	16	A-653 SS GR 50 CL1	50	65	0.0555
MSTA49	16	A-653 SS GR 50 CL1	50	65	0.0555
LSTI Series	18	A-653 SS GR 40	40	55	0.0445
MSTI Series	12	A-653 SS GR 40	40	55	0.0975
MSTC28	16	A-653 SS GR 50 CL1	50	65	0.0555
MSTC40	16	A-653 SS GR 50 CL1	50	65	0.0555
MSTC52	16	A-653 SS GR 50 CL1	50	65	0.0555
MSTC66	14	A-653 SS GR 50 CL1	50	65	0.0685
MSTC78	14	A-653 SS GR 50 CL1	50	65	0.0685
HTP37Z	16	A-653 SS GR 33	33	45	0.0555
HRS	12	A-653 SS GR 33	33	45	0.0975

For **SI:** 1 inch = 25.4 mm, 1 ksi = 6.895 MPa.

DIVISION: 06 00 00—WOOD, PLASTICS AND COMPOSITES
Section: 06 05 23—Wood, Plastic, and Composite Fastenings

REPORT HOLDER:

SIMPSON STRONG-TIE COMPANY INC.

EVALUATION SUBJECT:

SIMPSON STRONG-TIE® CONNECTORS USING SD-SERIES SCREWS

1.0 REPORT PURPOSE AND SCOPE

Purpose:

The purpose of this evaluation report supplement is to indicate that Simpson Strong-Tie® connectors used as wood framing connectors, described in ICC-ES evaluation report ESR-3096, have also been evaluated for compliance with the codes noted below as adopted by the Los Angeles Department of Building and Safety (LADBS).

Applicable code editions:

- 2023 *City of Los Angeles Building Code* (LABC)
- 2023 *City of Los Angeles Residential Code* (LARC)

2.0 CONCLUSIONS

The Simpson Strong-Tie® connectors used as wood framing connectors, described in Sections 2.0 through 7.0 of the evaluation report ESR-3096, comply with the LABC Chapter 23, and the LARC, and are subject to the conditions of use described in this supplement.

3.0 CONDITIONS OF USE

The Simpson Strong-Tie connectors used as wood framing connectors, described in this evaluation report supplement, must comply with all of the following conditions:

- All applicable sections in the evaluation report ESR-3096.
- The design, installation, conditions of use and labeling are in accordance with the 2021 *International Building Code®* (2018 IBC) provisions noted in the evaluation report ESR-3096.
- The design, installation and inspection are in accordance with additional requirements of LABC Chapters 16 and 17, as applicable.
- Under the LARC, an engineered design in accordance with LARC Section R301.1.3 must be submitted.

This supplement expires concurrently with the evaluation report, reissued January 2024.

ICC-ES Evaluation Reports are not to be construed as representing aesthetics or any other attributes not specifically addressed, nor are they to be construed as an endorsement of the subject of the report or a recommendation for its use. There is no warranty by ICC Evaluation Service, LLC, express or implied, as to any finding or other matter in this report, or as to any product covered by the report.

Copyright © 2024 ICC Evaluation Service, LLC. All rights reserved.